DC GEARED MOTOR

SPG Co., Ltd.

SPG MOTOR

TECHNICAL EXPLANTION(DC MOTOR)

THECHNICAL EXPLANATION

1. FEATURE

- Excellent performance on starting owing to high starting torque
- High efficiency in comparison with the same size AC Motor
- Easy to control speed and change the rotational direction
- Instantaneous stop
- Due to the wide range of the rated voltage, low voltage motors applicable to portable equipments can be realized

2. DC MOTOR PERFOMANCE CURVE

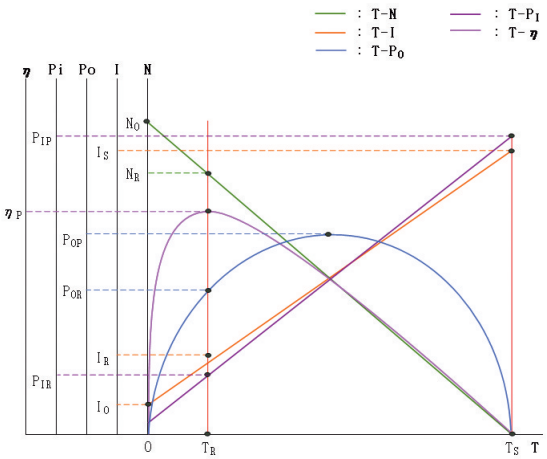

Symbol : Motor Data(Unit)	Meaning
N : Revolution Speed(rpm)	**No** : No load revolution speed
	NR : Rated load revolution speed
T : Torque(kgf · cm)	**TR** : Rated load torque
	TS : Peak Torque (Stall)
I : Current(A)	**Io** : No-load current(A)
	IR : Rated load current
	IS : Peak current (Stall)
Po : Output(W)	**POP** : Max. output
	POR : Rated output
PI : Input(W)	**PIP** : Max. input(W)
	PIR : Rated input
η : Efficiency(%)	η_P : Peak efficiency

Calculation Formula	Examples
$Po(W) = N(rpm) \times T(kgf \cdot cm) \times 1.027 \times 10^{-2}$	$P_{OP} = (T_S/2) \times (N_O/2) \times 1.027 \times 10^{-2}$
	$P_{OR} = T_R \times N_R \times 1.027 \times 10^{-2}$
$P_I(W) = I(A) \times V(V)$, (V : Supply Voltage)	$P_{IP} = I_S \times V$
	$P_{IR} = I_R \times V$
$\eta(\%) = P_O/P_I \times 100$	$\eta_P = P_{OR}/P_{IR} \times 100$

3. Selecting DC Motor

The output of a motor represents the ability of a motor.

Generally, "Motor output" means the output at rated torque (T_R)

The motor is able to operate continuously without heatsink when the load torque is less than the rate torque (T_R)

Otherwise, the motor should operate intermittently. When the motor operates at the overload torque, it might be damaged.

CODING SYSTEM

COMPACT TYPE

RM TYPE

RM	3	4	B	B	T

SERIES
RM : DC Motor

MOTOR DIA.
3 : ø30[1.181″]

LENGTH
★ refer to the spec sheet

VOLTAGE
A : 12V
B : 24V
C : The Others

BEARING
M : METAL(SLEEVE)
B : BALL

CONNECTOR OPTIONAL
T : TERMINAL
L : LEAD WIRE

RM	4	4	B	M	L

SERIES
RM : DC Motor

MOTOR DIA.
4 : ø40[1.575″]

LENGTH
★ refer to the spec sheet

VOLTAGE
A : 12V
B : 24V
C : The Others

BEARING
M : METAL(SLEEVE)
B : BALL

CONNECTOR OPTIONAL
T : TERMINAL
L : LEAD WIRE

RM	5	2	B	B	T

SERIES
RM : DC Motor

MOTOR DIA.
5 : ø54[2.126″]

LENGTH
★ refer to the spec sheet

VOLTAGE
A : 12V
B : 24V
C : The Others

BEARING
B : BALL

CONNECTOR OPTIONAL
T : TERMINAL

CODING SYSTEM

COMPACT TYPE

RS TYPE

RS 3 4 B B T 0

SERIES
RS : DC Geared Motor

MOTOR DIA.
3 : ø30[1.181"]

LENGTH ★refer to the spec sheet

VOLTAGE
A : 12V
B : 24V
C : The Others

BEARING
W : OILLESS METAL
X : BALL
Y : MOTOR-OILLESS METAL, GEAR BOX-BALL
Z : MOTOR-BALL, GEAR BOX-OILLESS METAL

CONNECTOR OPTIONAL
T : TERMINAL
L : LEAD WIRE

GEAR RATIO RS3
O : 1/6.3
P : 1/9.9
Q : 1/19.5
R : 1/30.9
S : 1/60.5
T : 1/95.9
U : 1/187.7
V : 1/297.5
W : 1/581.8

RS 4 4 B W T A

SERIES
RS : DC Geared Motor

MOTOR DIA.
4 : ø40[1.575"]

LENGTH ★refer to the spec sheet

VOLTAGE
A : 12V
B : 24V
C : The Others

BEARING
W : OILLESS METAL
X : BALL
Y : MOTOR-OILLESS METAL, GEAR BOX-BALL
Z : MOTOR-BALL, GEAR BOX-OILLESS METAL

CONNECTOR OPTIONAL
T : TERMINAL
L : LEAD WIRE

GEAR RATIO RS4
A : 1/5.9
B : 1/11.5
C : 1/19.7
D : 1/38.3
E : 1/65.5
F : 1/127.8
G : 1/218.4
H : 1/425.9
I : 1/728.1
J : 1/1419.8

RS 5 2 B X T A

SERIES
RS : DC Geared Motor

MOTOR DIA.
5 : ø54[2.216"]

LENGTH ★refer to the spec sheet

VOLTAGE
A : 12V
B : 24V
C : The Others

BEARING
X : BALL
Z : MOTOR-BALL, GEAR BOX-OILLESS METAL

CONNECTOR OPTIONAL
T : TERMINAL

GEAR RATIO RS5
A : 1/5.9
C : 1/19.7
E : 1/65.5

CODING SYSTEM

COMPACT TYPE

DC MOTOR

S 9 D 40 - 24 C H 0 A01

BRAND
S : SPG Co., Ltd

SIZE
6 : □ 60(mm)
7 : □ 70(mm)
8 : □ 80(mm)
9 : □ 90(mm)

MOTOR TYPE
D : PERMANENT MAGNET DC MOTOR

OUTPUT
06 : 6W
10 : 10W
15 : 15W
25 : 25W
40 : 40W
60 : 60W
90 : 90W
120 : 120W
150 : 150W
200 : 200W
300 : 300W

VOLTAGE
12 : 12V
24 : 24V
36 : 36V
48 : 48V
90 : 90V

SHAFT TYPE
A : GEAR HEAD KA/DA/SA TYPE
B : GEAR HEAD KB/DB/SB TYPE
C : GEAR HEAD KC/DC/SC TYPE
GEAR HEAD KD/DD/SD TYPE
H : GEAR HEAD KH/DH/SH TYPE
D : D-CUT TYPE
K : KEY TYPE
S : STRAIGHT TYPE
G : SPECIAL & WORM GEAR TYPE
M : Ø11 SITI TYPE
W : Ø 9 SITI TYPE

SHAFT IMPACT TYPE
H : HEAVY IMPACT
L : LIGHT IMPACT

SPECIAL SERIES NO.

GEAR HEAD

S 9 K C 36 B H – S

BRAND
S : SPG Co., Ltd

SIZE
6 : □ 60(mm)
7 : □ 70(mm)
8 : □ 80(mm)
9 : □ 90(mm)

SHAFT TYPE
S : STRAIGHT TYPE
D : D-CUT TYPE
K : KEY TYPE

OUTPUT
A : 6W~25W
B : 40W
C : 60W~150W
D : 60W~150W
H : 200W~300W

GEAR RATIO
REDUCTION RATIO (36:1/36)

BEARING
B : BALL BEARING+METAL BEARING(6W~40W)
ALL BALL BEARING(60W이상)
B1 : ALL BALL BEARING(6W ~40W)
M : METAL BEARING(6W~40W)

SHAFT IMPACT TYPE
H : HEAVY IMPACT
L : LIGHT IMPACT

SPECIAL TYPE
S : FLANGE TYPE

DC WORM GEARED MOTOR

RA 6 1 B L S 0 A01

RIGHT ANGLE TYPE

MOTOR DIA.
6 : ø60[1.175″]

LENGTH
1 : 114.5

VOLTAGE
A : 12V
B : 24V
C : 36V
D : 48V
H : 90V

GEAR RATIO
5 : 1/5
10 : 1/10
15 : 1/15
24 : 1/24
38 : 1/38
50 : 1/50
75 : 1/75

SHAFT DIRECTION
L : LEFT
R : RIGHT
B : BOTH

SPECIAL SERIES NO.

COMPACT TYPE

RM3 SERIES MOTOR

MOTOR DIMENSION

UNIT : mm[inch]

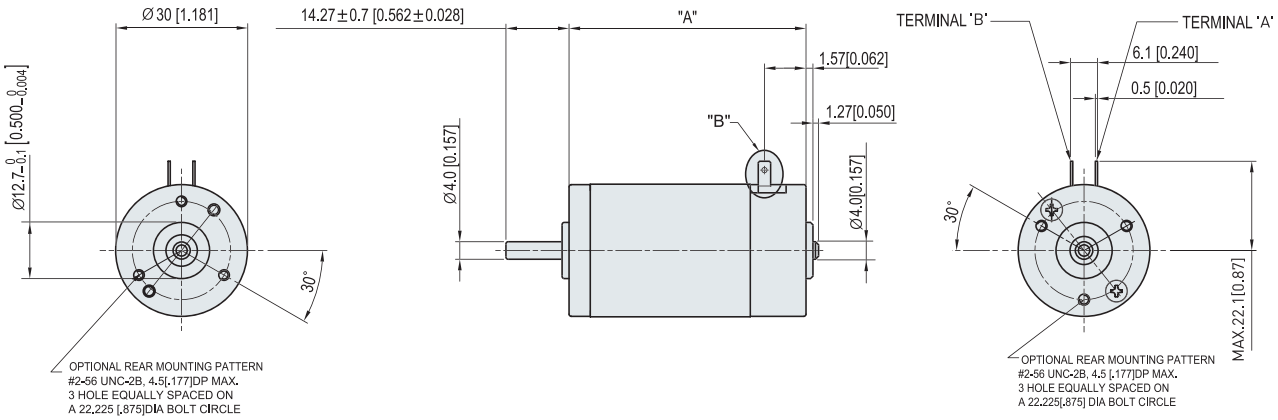

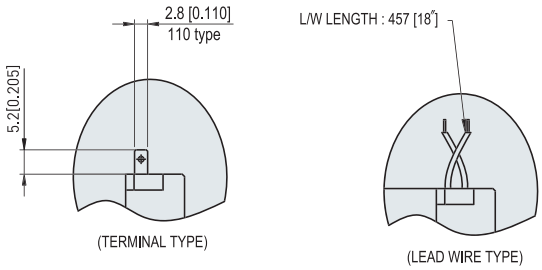

DETAIL "B" CONNECTOR METHOD

MODEL NO.	"A"
RM32□□□	50.6 [1.992]
RM33□□□	53.7 [2.114]
RM34□□□	60.0 [2.362]

MOTOR SPECIFICATION

(Voltage : DC 24V)

Type	No Load		Rated				Stall(Peak)			Run Duty	Weight
	Revolution	Current	Contionuous Torque(Max.)		Revolution	Current	Peak Torque		Current		
	RPM	A	–		RPM	A	–		A	Hr	Kg
RM32B□□	7750	0.24	0.011	N-m	5800	0.55	0.048	N-m	2.05	500	0.59
			1.6	oz-in			6.8	oz-in			
			0.11	kgf · cm			0.49	kgf · cm			
RM33B□□	8132	0.28	0.014	N-m	6550	0.62	0.070	N-m	3.15	500	0.74
			2.0	oz-in			9.9	oz-in			
			0.14	kgf · cm			0.71	kgf · cm			
RM34B□□	10160	0.40	0.018	N-m	8120	1.11	0.127	N-m	6.05	500	0.89
			2.5	oz-in			18.0	oz-in			
			0.18	kgf · cm			1.30	kgf · cm			

※ Run duty is valued at rated Voltage and No load.

COMPACT TYPE

RS3 SERIES GEARED MOTOR

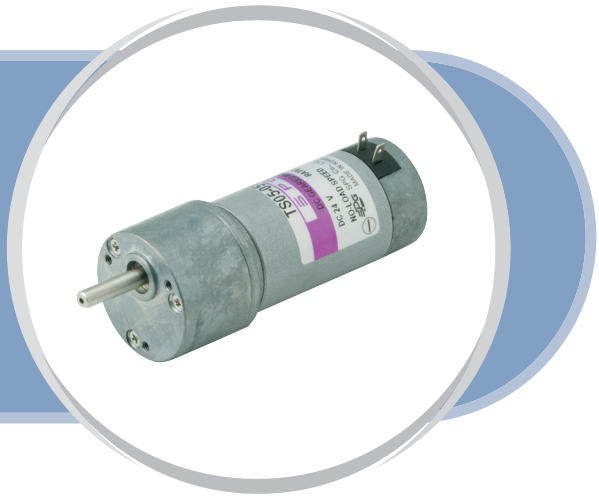

MOTOR DIMENSION

UNIT : mm[inch]

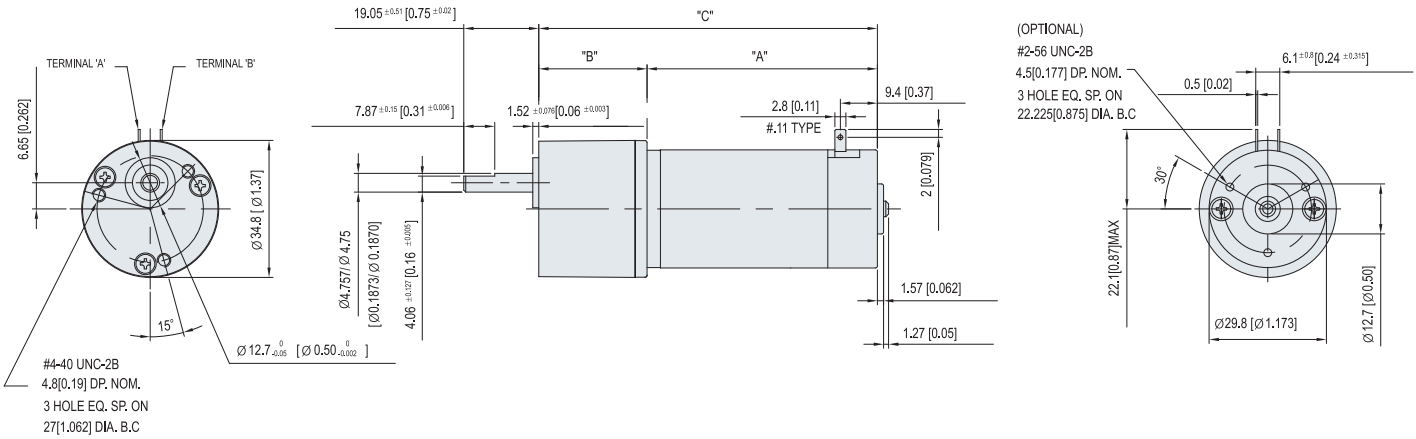

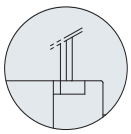

CONNECTOR OPTIONAL

LEAD WIRES
457±10[17.992±0.787](L/W LENGTH)
RED&BLACK

MODEL NO.	"A"	"B"		"C"
		RATIO : ~ 1/187.7	RATIO : 1/297.5 ~	
RS32□□□□	50.1 [1.972]	24.5 [0.965]	27.5 [1.083]	74.6 [2.937], 77.6 [3.055]
RS33□□□□	52.2 [2.055]			76.7 [3.020], 79.7 [3.138]
RS34□□□□	58.5 [2.303]			83.0 [3.268], 86.0 [3.386]

PERMISSIBLE TORQUE OF GEAR BOX

TYPE	GEAR RATIO	6.3	9.9	19.5	30.9	60.5	95.9	187.7	297.5	581.8
RS32B□□□	No Load rpm	1230	783	397	251	128	81	41	26	13
	N-m	0.06	0.08	0.16	0.22	0.44	0.62	1.22	1.23	1.23
	oz-in	7.9	11.2	22.1	31.6	61.8	88.2	172.6	174.8	174.8
	kgf · cm	0.57	0.81	1.60	2.28	4.46	6.36	12.44	12.60	12.60
RS33B□□□	No Load rpm	1291	821	417	263	134	85	43	27	14
	N-m	0.07	0.10	0.20	0.28	0.56	0.79	1.23	1.23	1.23
	oz-in	10.1	14.3	28.2	40.2	78.7	112.3	174.8	174.8	174.8
	kgf · cm	0.73	1.03	2.03	2.90	5.67	8.09	12.60	12.60	12.60
RS34B□□□	No Load rpm	1613	1026	521	329	168	106	54	34	17
	N-m	0.09	0.13	0.26	0.36	0.71	1.02	1.23	1.23	1.23
	oz-in	13.0	18.4	36.2	51.7	101.2	144.3	174.8	174.8	174.8
	kgf · cm	0.94	1.33	2.61	3.72	7.29	10.40	12.60	12.60	12.60

■ ■ Color indicates that the output shaft of the geared motor rotates in the same direction as the output shaft of the motor.
Others indicate rotation in the opposite direction.

■ No Load rpm equals Motor no load rpm divided by gear ratio.
The actual rotation speed is less 2-20% than the displayed value according to the load.

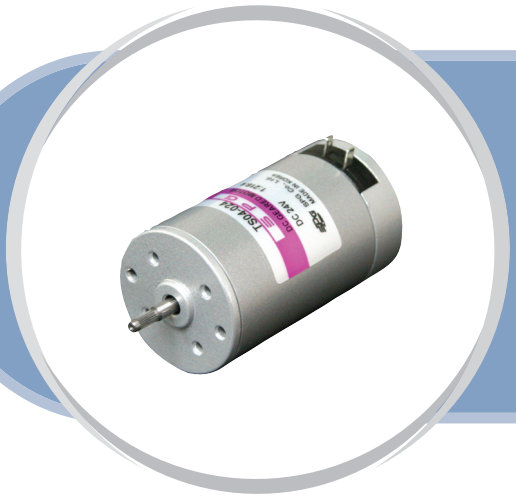

COMPACT TYPE

RM4 SERIES MOTOR

MOTOR DIMENSION

UNIT : mm[inch]

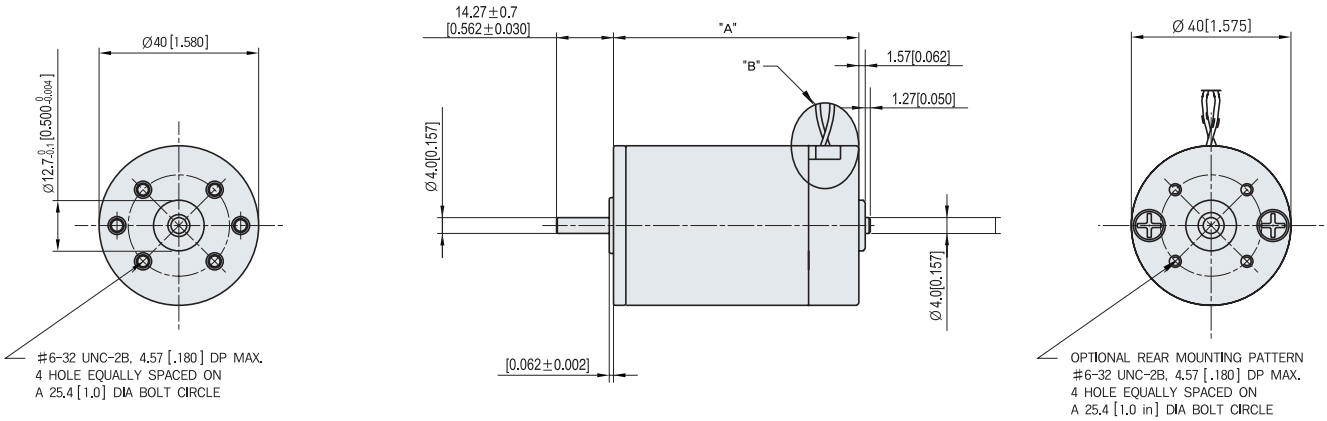

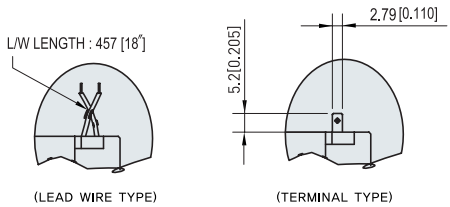

DETAIL "B" CONNECTOR METHOD

MODEL NO.	"A"
RM42□□□	46.4 [1.827]
RM43□□□	56.0 [2.205]
RM44□□□	61.1 [2.406]
RM45□□□	68.7 [2.705]
RM46□□□	77.6 [3.055]

MOTOR SPECIFICATION

(Voltage : DC 24V)

Type	No Load		Rated				Stall(Peak)			Run Duty	Weight
	Revolution	Current	Contionuous Torque(Max.)		Revolution	Current	Peak Torque		Current		
	RPM	A	–		RPM	A	–		A	Hr	Kg
RM42B□□	7015	0.24	0.02	N-m	5497	0.74	0.064	N-m	2.9	1000	0.20
			2.22	oz-in			9.02	oz-in			
			0.16	kgf · cm			0.65	kgf · cm			
RM43B□□	5993	0.20	0.03	N-m	4486	1.13	0.140	N-m	5.0	1000	0.25
			4.58	oz-in			19.84	oz-in			
			0.33	kgf · cm			1.43	kgf · cm			
RM44B□□	6151	0.24	0.04	N-m	5111	1.20	0.266	N-m	7.7	1000	0.29
			5.97	oz-in			37.61	oz-in			
			0.43	kgf · cm			2.71	kgf · cm			
RM45B□□	6348	0.30	0.05	N-m	5440	1.58	0.324	N-m	10.8	1000	0.33
			6.80	oz-in			45.93	oz-in			
			0.49	kgf · cm			3.31	kgf · cm			
RM46B□□	4916	0.24	0.07	N-m	4101	1.53	0.369	N-m	8.7	1000	0.39
			9.44	oz-in			52.32	oz-in			
			0.68	kgf · cm			3.77	kgf · cm			

※ Run duty is valued at rated Voltage and No load.

COMPACT TYPE

RS4 SERIES GEARED MOTOR

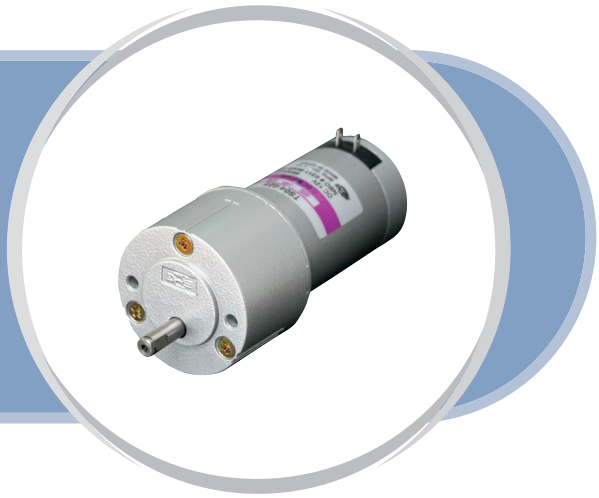

MOTOR DIMENSION

UNIT : mm[inch]

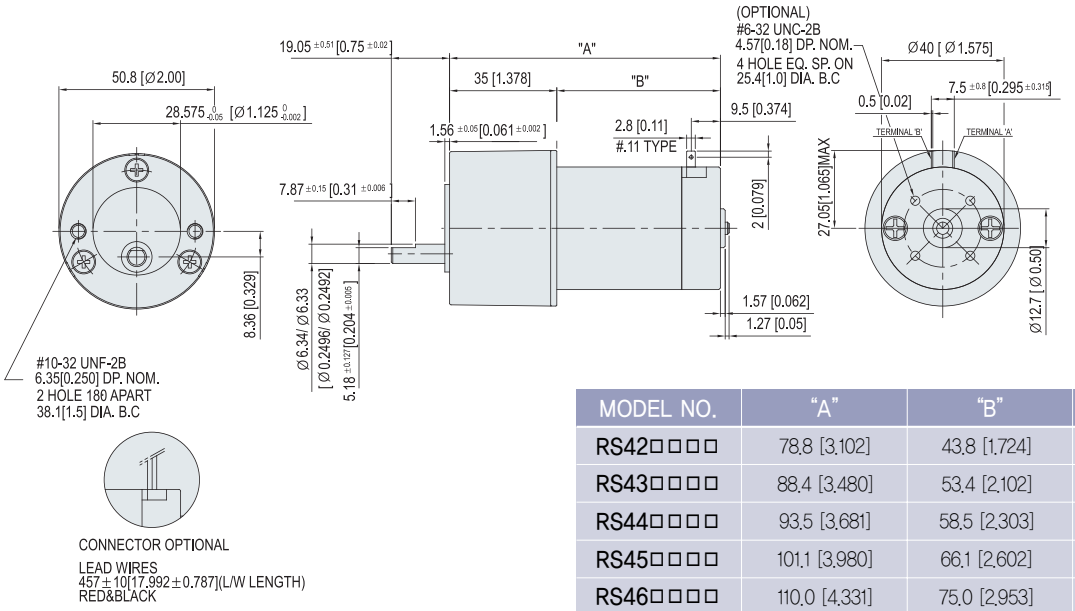

MODEL NO.	"A"	"B"	WEIGHT(kg)
RS42□□□□	78.8 [3.102]	43.8 [1.724]	0.39
RS43□□□□	88.4 [3.480]	53.4 [2.102]	0.43
RS44□□□□	93.5 [3.681]	58.5 [2.303]	0.50
RS45□□□□	101.1 [3.980]	66.1 [2.602]	0.54
RS46□□□□	110.0 [4.331]	75.0 [2.953]	0.58

PERMISSIBLE TORQUE OF GEAR BOX

TYPE	GEAR RATIO	5.9	11.5	19.7	38.3	65.5	127.8	218.4	425.9	728.1	1419.8
RS42□□□□	No Load rpm	1189	610	356	183	107	55	32	16	10	5
	N-m	0.07	0.15	0.23	0.44	0.67	1.31	2.02	2.12	2.12	2.12
	oz-in	10.6	20.7	31.9	62.0	95.4	186.2	286.3	299.7	299.7	299.7
	kgf · cm	0.76	1.49	2.30	4.47	6.88	13.42	20.63	21.60	21.60	21.60
RS43□□□□	No Load rpm	1016	521	304	156	91	47	27	14	8	4
	N-m	0.15	0.30	0.46	0.90	1.39	2.12	2.12	2.12	2.12	2.12
	oz-in	21.9	42.7	65.8	127.9	196.8	299.7	299.7	299.7	299.7	299.7
	kgf · cm	1.58	3.07	4.74	9.21	14.18	21.60	21.60	21.60	21.60	21.60
RS44□□□□	No Load rpm	1043	535	312	161	94	48	28	14	8	4
	N-m	0.20	0.39	0.61	1.18	1.81	2.12	2.12	2.12	2.12	2.12
	oz-in	28.5	55.6	85.7	166.6	256.4	299.7	299.7	299.7	299.7	299.7
	kgf · cm	2.05	4.01	6.18	12.01	18.48	21.60	21.60	21.60	21.60	21.60
RS45□□□□	No Load rpm	1076	552	322	166	97	50	29	15	9	4
	N-m	0.23	0.45	0.69	1.34	2.06	2.12	2.12	2.12	2.12	2.12
	oz-in	32.5	63.3	97.7	189.9	292.2	299.7	299.7	299.7	299.7	299.7
	kgf · cm	2.34	4.56	7.04	13.68	21.06	21.60	21.60	21.60	21.60	21.60
RS46□□□□	No Load rpm	833	427	250	128	75	38	23	12	7	3
	N-m	0.32	0.62	0.96	1.86	2.12	2.12	2.12	2.12	2.12	2.12
	oz-in	45.1	87.9	135.5	263.5	299.7	299.7	299.7	299.7	299.7	299.7
	kgf · cm	3.25	6.33	9.77	18.99	21.60	21.60	21.60	21.60	21.60	21.60

■ ■ Color indicates that the output shaft of the geared motor rotates in the same direction as the output shaft of the motor. Others indicate rotation in the opposite direction.

■ No Load rpm equals Motor no load rpm divided by gear ratio. The actual rotation speed is less 2-20% than the displayed value according to the load.

COMPACT TYPE

RM5 SERIES MOTOR

MOTOR DIMENSION

UNIT : mm[inch]

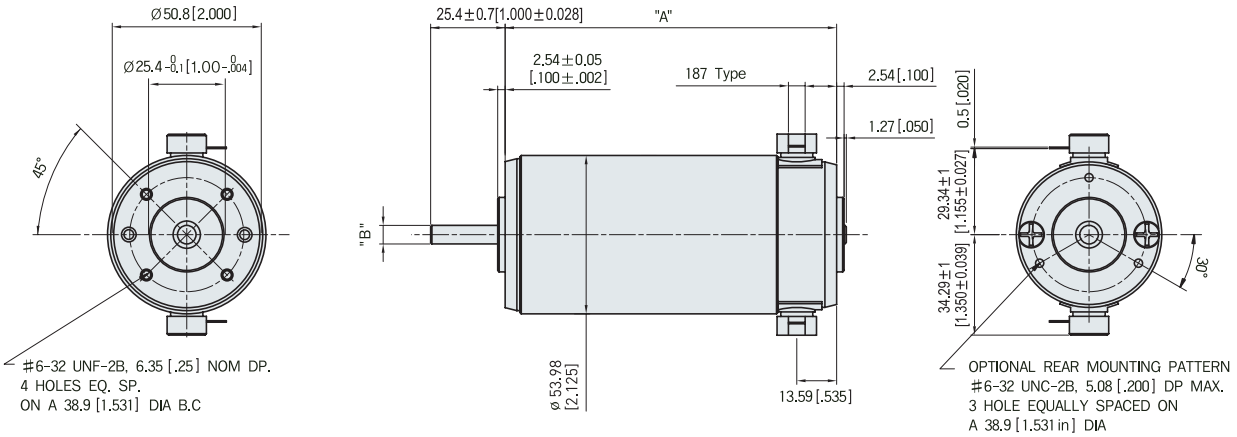

MODEL NO.	"A"	"B"
RM51□□□	75.0 [2.953]	6.336±0.003 [0.2494±0.0001]
RM52□□□	81.0 [3.189]	
RM53□□□	94.0 [3.701]	

MODEL NO.	"A"	"B"
RM54□□□	103.4 [4.071]	6.336±0.003 [0.2494±0.0001]
RM55□□□	113.0 [4.449]	

MOTOR SPECIFICATION

(Voltage : DC 24V)

Type	No Load		Rated				Stall(Peak)			Run Duty	Weight
	Revolution	Current	Contionuous Torque(Max.)		Revolution	Current	Peak Torque		Current		
	RPM	A	–		RPM	A	–		A	Hr	Kg
RM51B□T	4230	0.4	0.06	N-m	3725	1.36	0.46	N-m	11.36	2000	0.59
			8.0	oz-in			64.5	oz-in			
			0.58	kgf · cm			4.65	kgf · cm			
RM52B□T	4087	0.5	0.09	N-m	3595	1.94	0.67	N-m	15.55	2000	0.74
			12.8	oz-in			94.8	oz-in			
			0.92	kgf · cm			6.83	kgf · cm			
RM53B□T	3400	0.5	0.15	N-m	2930	2.67	0.96	N-m	19.27	2000	0.89
			21.2	oz-in			135.7	oz-in			
			1.53	kgf · cm			9.78	kgf · cm			
RM54B□T	3630	0.5	0.18	N-m	3180	3.18	1.31	N-m	26.47	2000	1
			25.5	oz-in			185.4	oz-in			
			1.84	kgf · cm			13.36	kgf · cm			
RM55B□T	2900	0.4	0.22	N-m	2510	3.05	1.46	N-m	23.6	2000	1.12
			31.1	oz-in			207.0	oz-in			
			2.24	kgf · cm			14.92	kgf · cm			

※ Run duty is valued at rated Voltage and No load.

COMPACT TYPE

RS5 SERIES GEARED MOTOR

MOTOR DIMENSION

UNIT : mm[inch]

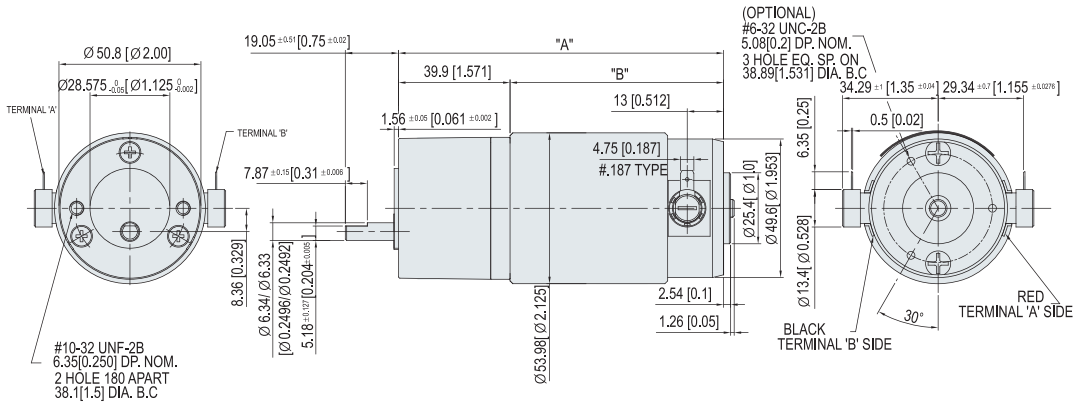

MODEL NO.	"A"	"B"	WEIGHT(kg)
RS51□□□□	109.9 [4.327]	70.0 [2.756]	0.84
RS52□□□□	115.90 [4.563]	76.0 [2.992]	0.95

PERMISSIBLE TORQUE OF GEAR BOX

TYPE	GEAR RATIO	5.9	19.7	65.5
RS51B□□□	No Load rpm	717	215	65
	N-m	0.27	0.82	2.12
	oz-in	38.46	115.59	299.74
	kgf · cm	2.77	8.33	21.60
RS52B□□□	No Load rpm	693	207	62
	N-m	0.43	1.29	2.12
	oz-in	61.01	183.35	299.74
	kgf · cm	4.40	13.21	21.60

■ ■ Color indicates that the output shaft of the geared motor rotates in the same direction as the output shaft of the motor.
Others indicate rotation in the opposite direction.

■ No Load rpm equals Motor no load rpm divided by gear ratio.
The actual rotation speed is less 2-20% than the displayed value according to the load.

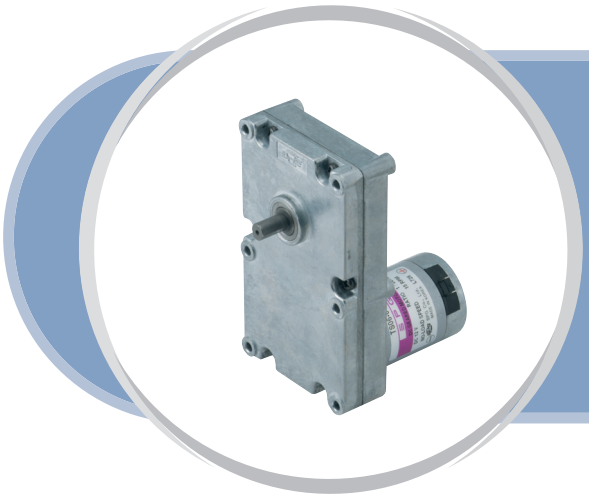

COMPACT TYPE

SG SERIES GEARED MOTOR

MOTOR DIMENSION

UNIT : mm[inch]

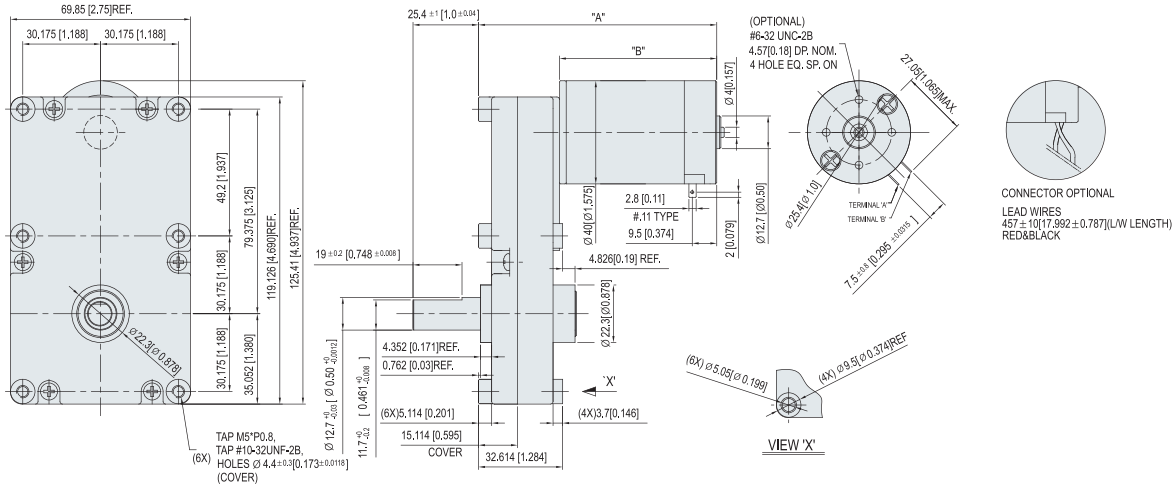

MODEL NO.	"A"	"B"
SG42□□□□	77.814 [3.064]	46.4 [1.827]
SG43□□□□	87.414 [3.441]	56.0 [2.205]
SG44□□□□	92.514 [3.642]	61.1 [2.406]

MODEL NO.	"A"	"B"
SG45□□□□	100.114 [3.941]	68.7 [2.705]
SG46□□□□	109.014 [4.292]	77.6 [3.055]

PERMISSIBLE TORQUE OF GEAR BOX

(Voltage : DC 24V)

TYPE	GEAR RATIO	395.7	1218.1	1412.5	1620.7	1709.9	3238.2
SG42B□□□	No Load rpm	17.7	5.8	5.0	4.3	4.1	2.2
	N-m	4.07	11.28	13.08	15.01	15.83	29.98
	oz-in	576.4	1596.9	1851.9	2124.8	2241.8	4245.2
	kgf · cm	41.54	115.08	133.45	153.12	161.55	305.92
SG43B□□□	No Load rpm	15.1	4.9	4.2	3.7	3.5	1.9
	N-m	8.40	23.26	26.97	30.95	32.65	33.81
	oz-in	1188.8	3293.8	3819.5	4382.4	4623.6	4787.5
	kgf · cm	85.67	237.36	275.24	315.81	333.19	345.00
SG44B□□□	No Load rpm	15.5	5.1	4.4	3.8	3.6	1.9
	N-m	10.94	30.31	33.81	33.81	33.81	33.81
	oz-in	1549.2	4292.0	4787.5	4787.5	4787.5	4787.5
	kgf · cm	111.64	309.29	345.00	345.00	345.00	345.00
SG45B□□□	No Load rpm	16.0	5.2	4.5	3.9	3.7	2.0
	N-m	12.47	33.81	33.81	33.81	33.81	33.81
	oz-in	1765.3	4787.5	4787.5	4787.5	4787.5	4787.5
	kgf · cm	127.21	345.00	345.00	345.00	345.00	345.00
SG46B□□□	No Load rpm	12.4	4.0	3.5	3.0	2.9	1.5
	N-m	17.30	33.81	33.81	33.81	33.81	33.81
	oz-in	2449.8	4787.5	4787.5	4787.5	4787.5	4787.5
	kgf · cm	176.54	345.00	345.00	345.00	345.00	345.00

※ Please contact our sales Department regarding other gear ratio.

COMPACT TYPE

SP SERIES GEARED MOTOR

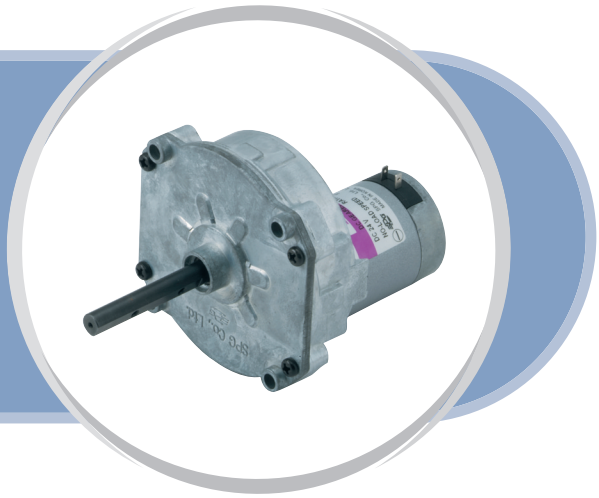

MOTOR DIMENSION

UNIT : mm[inch]

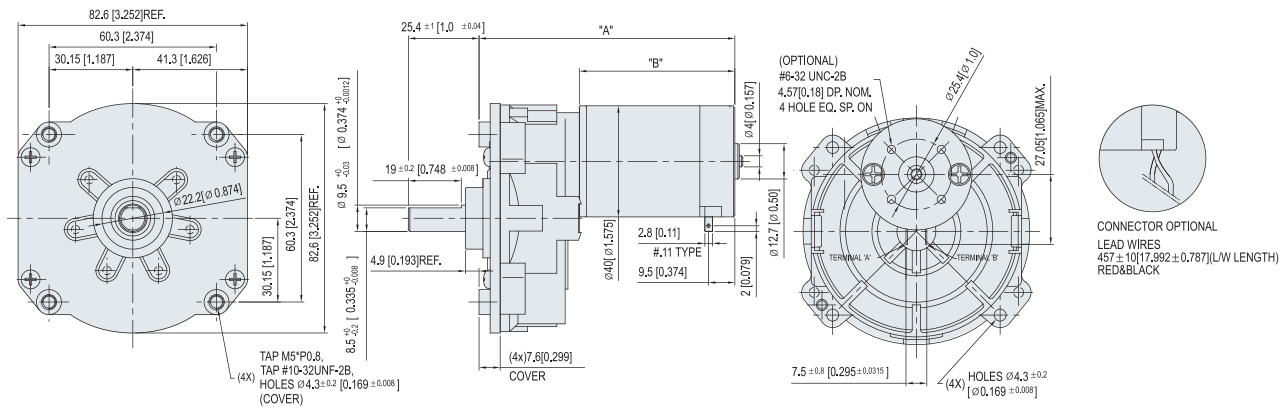

MODEL NO.	"A"	"B"
SP42□□□□	82.5 [3.248]	46.4 [1.827]
SP43□□□□	92.1 [3.626]	56.0 [2.205]
SP44□□□□	97.2 [3.827]	61.1 [2.406]

MODEL NO.	"A"	"B"
SP45□□□□	104.8 [4.126]	68.7 [2.705]
SP46□□□□	113.7 [4.476]	77.6 [3.055]

PERMISSIBLE TORQUE OF GEAR BOX

(Voltage : DC 24V)

TYPE	GEAR RATIO	32.4	73.5	148.8	253	747.5	3105.2
SP42B□□□	No Load rpm	216.5	95.4	47.1	27.7	9.4	2.3
	N-m	0.37	0.84	1.53	2.60	6.92	11.27
	oz-in	52.5	118.9	216.8	368.6	980.0	1595.8
	kgf · cm	3.78	8.57	15.62	26.56	70.62	115.00
SP43B□□□	No Load rpm	185.0	81.5	40.3	23.7	8.0	1.9
	N-m	0.76	1.73	3.16	5.37	11.27	11.27
	oz-in	108.1	245.3	447.1	760.2	1595.8	1595.8
	kgf · cm	7.79	17.68	32.22	54.78	115.00	115.00
SP44B□□□	No Load rpm	189.8	83.7	41.3	24.3	8.2	2.0
	N-m	1.00	2.03	4.11	7.00	11.27	11.27
	oz-in	141.0	287.8	582.5	990.5	1595.8	1595.8
	kgf · cm	10.16	20.74	41.98	71.38	115.00	115.00
SP45B□□□	No Load rpm	195.9	86.4	42.7	25.1	8.5	2.0
	N-m	1.13	2.57	4.69	7.97	11.27	11.27
	oz-in	160.6	364.3	663.9	1128.7	1595.8	1595.8
	kgf · cm	11.57	26.25	47.84	81.34	115.00	115.00
SP46B□□□	No Load rpm	151.7	66.9	33.0	19.4	6.6	1.6
	N-m	1.57	3.57	6.51	11.06	11.27	11.27
	oz-in	222.9	505.7	921.3	1566.4	1595.8	1595.8
	kgf · cm	16.06	36.44	66.39	112.88	115.00	115.00

※ Please contact our sales Department regarding other gear ratio.

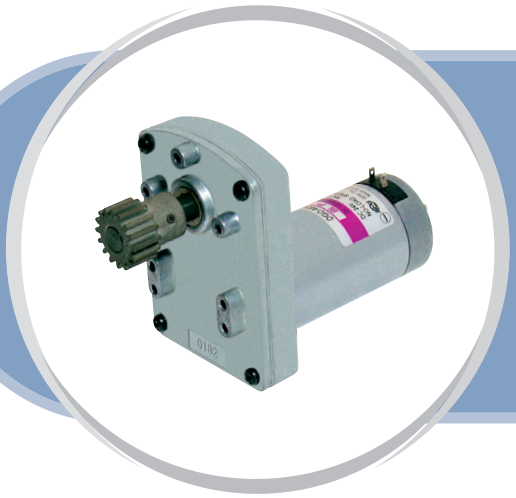

COMPACT TYPE

SR SERIES GEARED MOTOR

MOTOR DIMENSION

UNIT : mm[inch]

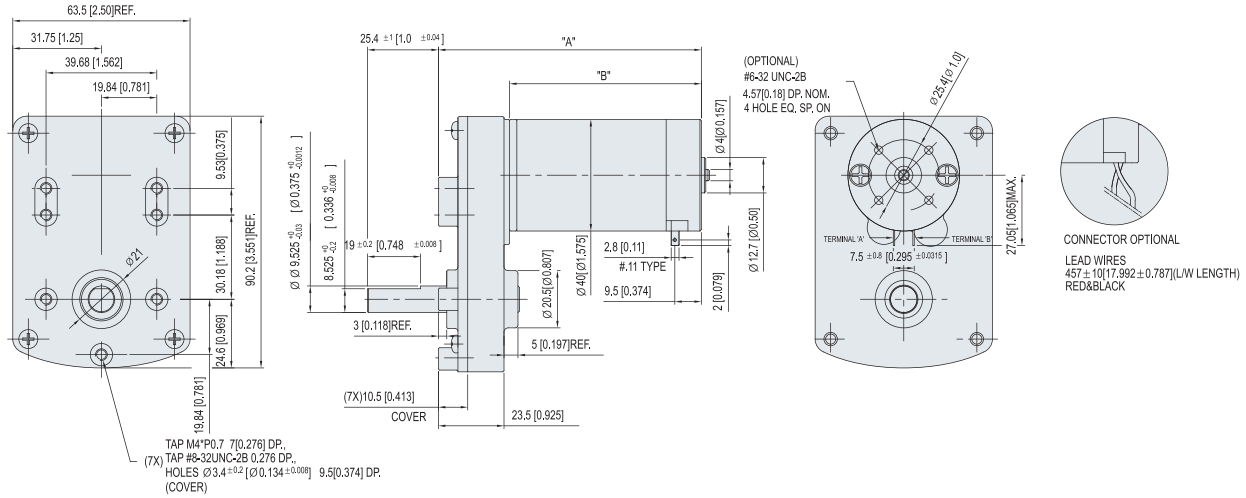

MODEL NO.	"A"	"B"
SR42□□□□	71.9 [2.831]	46.4 [1.827]
SR43□□□□	81.5 [3.209]	56.0 [2.205]
SR44□□□□	86.6 [3.409]	61.1 [2.406]

MODEL NO.	"A"	"B"
SR45□□□□	94.2 [3.709]	68.7 [2.705]
SR46□□□□	103.1 [4.059]	77.6 [3.055]

PERMISSIBLE TORQUE OF GEAR BOX

(Voltage : DC 24V)

TYPE	GEAR RATIO	58.8	62.5	124.9	144	192
SR42B□□□	No Load rpm	119.3	112.2	56.2	48.7	36.5
	N-m	0.75	0.79	1.43	1.65	2.19
	oz-in	105.7	112.4	202.2	233.1	310.7
	kgf · cm	7.62	8.10	14.57	16.80	22.39
SR43B□□□	No Load rpm	101.9	95.9	48.0	41.6	31.2
	N-m	1.54	1.64	2.94	3.39	4.53
	oz-in	218.1	231.9	417.0	480.7	641.0
	kgf · cm	15.72	16.71	30.05	34.64	46.19
SR44B□□□	No Load rpm	104.6	98.4	49.2	42.7	32.0
	N-m	2.01	2.13	3.84	4.42	5.90
	oz-in	284.2	302.1	543.3	626.4	835.2
	kgf · cm	20.48	21.77	39.15	45.14	60.19
SR45B□□□	No Load rpm	108.0	101.6	50.8	44.1	33.1
	N-m	2.29	2.43	4.37	5.04	6.72
	oz-in	323.9	344.3	619.2	713.8	951.7
	kgf · cm	23.34	24.81	44.62	51.44	68.58
SR46B□□□	No Load rpm	83.6	78.7	39.4	34.1	25.6
	N-m	3.17	3.37	6.07	7.00	9.33
	oz-in	449.5	477.8	859.3	990.5	1320.8
	kgf · cm	32.39	34.43	61.92	71.38	95.18

※ Please contact our sales Department regarding other gear ratio.

COMPACT TYPE

SQ SERIES GEARED MOTOR

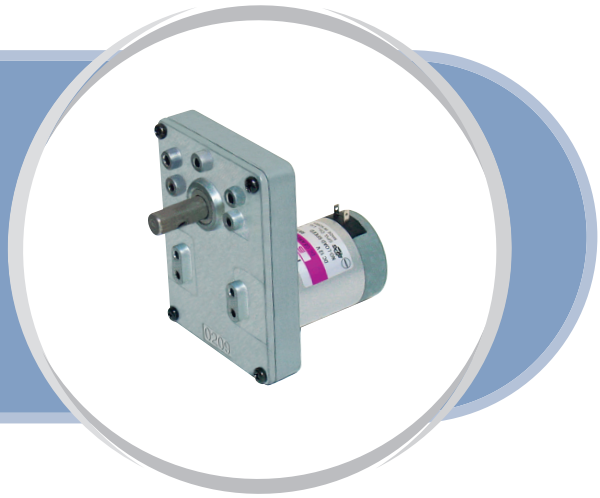

MOTOR DIMENSION

UNIT : mm[inch]

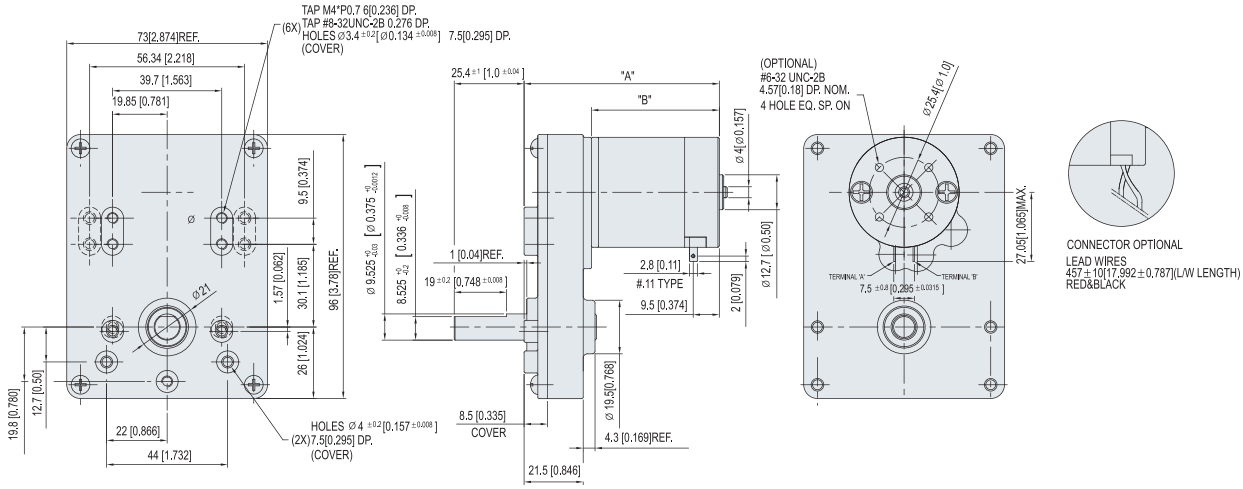

MODEL NO.	"A"	"B"
SQ42□□□□	70.9 [2.791]	46.4 [1.827]
SQ43□□□□	80.5 [3.169]	56.0 [2.205]
SQ44□□□□	85.6 [3.370]	61.1 [2.406]

MODEL NO.	"A"	"B"
SQ45□□□□	93.2 [3.669]	68.7 [2.705]
SQ46□□□□	102.1 [4.020]	77.6 [3.055]

PERMISSIBLE TORQUE OF GEAR BOX

(Voltage : DC 24V)

TYPE	GEAR RATIO	38.5	68.4	144	169	192.1	225	444	517.6	844.8	1240.2
SQ42B□□□	No Load rpm	182.2	102.6	48.7	41.5	36.5	31.2	15.8	13.6	8.3	5.7
	N-m	0.44	0.78	1.65	1.93	2.20	2.57	4.57	5.33	8.69	12.76
	oz-in	62.3	110.7	233.1	273.5	311.0	364.1	646.7	754.1	1230.6	1806.6
	kgf · cm	4.49	7.98	16.80	19.71	22.41	26.24	46.60	54.34	88.68	130.19
SQ43B□□□	No Load rpm	155.7	87.6	41.6	35.5	31.2	26.6	13.5	11.6	7.1	4.8
	N-m	0.91	1.61	3.39	3.98	4.53	5.30	9.42	10.98	14.21	14.21
	oz-in	128.5	228.3	480.7	564.2	641.2	751.2	1334.0	1555.2	2012.1	2012.1
	kgf · cm	9.26	16.45	34.64	40.66	46.21	54.13	96.13	112.07	145.00	145.00
SQ44B□□□	No Load rpm	159.8	89.9	42.7	36.4	32.0	27.3	13.9	11.9	7.3	5.0
	N-m	1.18	2.10	4.42	5.19	5.90	6.91	12.28	14.21	14.21	14.21
	oz-in	167.5	297.5	626.4	735.2	835.7	978.7	1738.2	2012.1	2012.1	2012.1
	kgf · cm	12.07	21.44	45.14	52.98	60.22	70.53	125.26	145.00	145.00	145.00
SQ45B□□□	No Load rpm	164.9	92.8	44.1	37.6	33.0	28.2	14.3	12.3	7.5	5.1
	N-m	1.35	2.39	5.04	5.92	6.72	7.88	13.99	14.21	14.21	14.21
	oz-in	190.8	339.0	713.8	837.7	952.2	1115.3	1980.8	2012.1	2012.1	2012.1
	kgf · cm	13.75	24.43	51.44	60.37	68.62	80.37	142.74	145.00	145.00	145.00
SQ46B□□□	No Load rpm	127.7	71.9	34.1	34.1	25.6	21.8	11.1	9.5	5.8	4.0
	N-m	1.87	3.32	7.00	8.21	9.33	10.93	14.21	14.21	14.21	14.21
	oz-in	264.9	470.6	990.5	1162.6	1321.5	1547.8	2012.1	2012.1	2012.1	2012.1
	kgf · cm	19.09	33.91	71.38	83.78	95.23	111.54	145.00	145.00	145.00	145.00

※ Please contact our sales Department regarding other gear ratio.

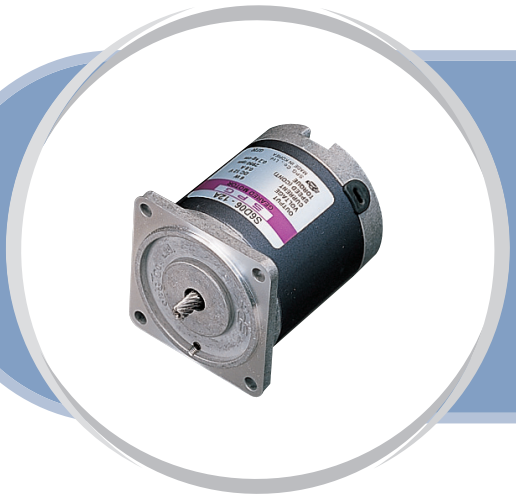

STANDARD TYPE

S6D SERIES [6~10W]

MOTOR DIMENSION

UNIT : mm[inch]

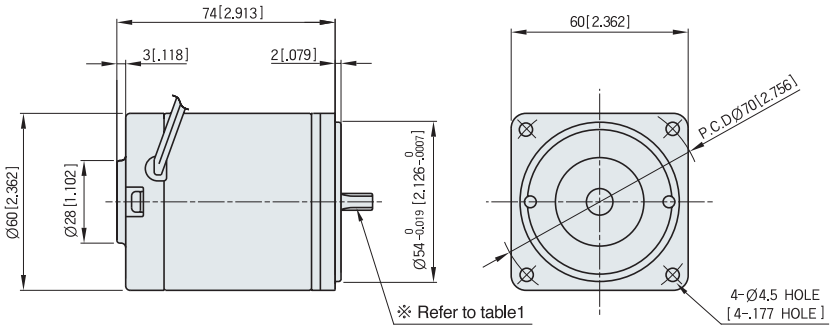

▼ SPEC for output shaft of motor-(Table1)

MODEL	GEARED TYPE	STRAIGHT TYPE	D-CUT TYPE
	S6D06-□A S6D10-□A	S6D06-□S S6D10-□S	S6D06-□D S6D10-□D
TYPE OF OUTPUT SHAFT	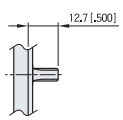	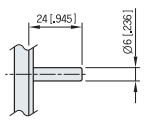	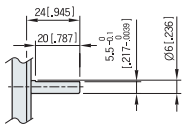

CHARACTERISTIC CURVE

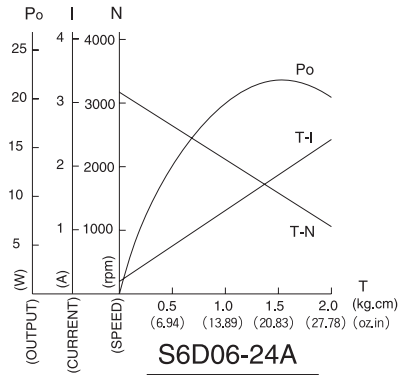

CIRCUIT DIAGRAM

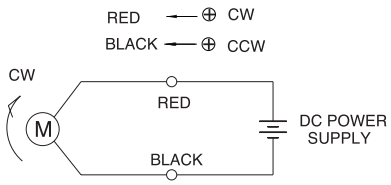

The direction of motor rotation is as viewed from the front shaft end of the motor

MOTOR SPECIFICATION

(Voltage : DC 24V)

Type	Voltage	Output	No Load		At Rated Lod				Run Duty	Weight
			Speed	Current(MAX.)	Speed	Torque		Current		
	V	W	RPM	A	RPM			A	Hr	Kg
S6D06-12□	12	6	3100	0.70	2800	0.021	N-m	0.80	2000	0.6
						2.9	oz-in			
						0.21	kgf · cm			
S6D06-24□	24	6	3200	0.40	2950	0.020	N-m	0.50	2000	0.6
						2.8	oz-in			
						0.20	kgf · cm			
S6D06-90□	90	6	3000	0.10	2800	0.021	N-m	0.15	2000	0.6
						2.9	oz-in			
						0.21	kgf · cm			
S6D10-12□	12	10	3300	0.90	3000	0.032	N-m	1.60	2000	0.6
						4.6	oz-in			
						0.33	kgf · cm			
S6D10-24□	24	10	3300	0.50	3000	0.032	N-m	0.80	2000	0.6
						4.6	oz-in			
						0.33	kgf · cm			
S6D10-90□	90	10	3300	0.15	3100	0.030	N-m	0.20	2000	0.6
						4.3	oz-in			
						0.31	kgf · cm			

※ Run duty is valued at rated Voltage and No load

GEARED MOTOR SPECIFICATION

UNIT : mm[inch]

▼ GEARED MOTOR ※ MOTOR MODEL : S6D06-□A, S6D10-□A
※ HEAD MODEL : S6□A3□~S6□A250□

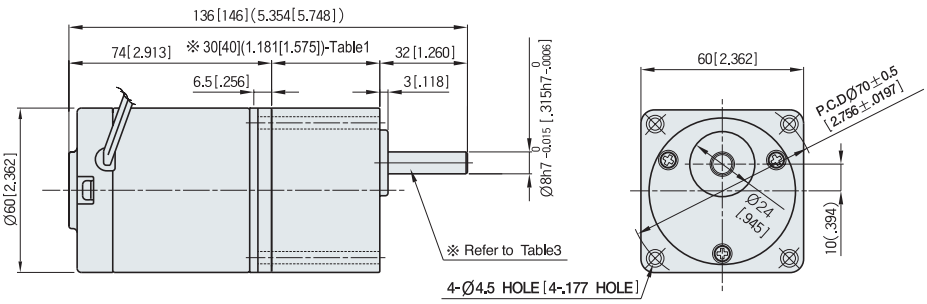

▼ INTER-DECIMAL GEAR HEAD
※ MODEL : S6GX10B

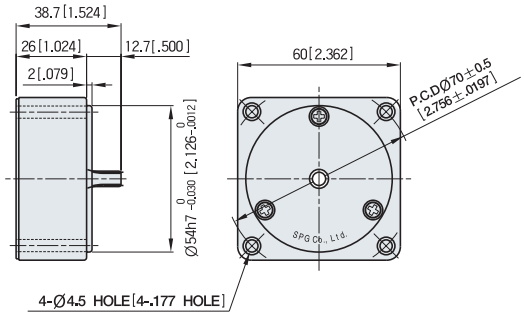

▼ ※30[40] - (Table1)

GEAR RATIO	SIZE:mm[inch]
S6 □ A3 □ ~ S6 □ A18 □	30[1.181]
S6 □ A20 □ ~ S6 □ A250 □	40[1.575]

▼ WEIGHT - (Table2)

PART		WEIGHT:kg(oz)
MOTOR		0.6/0.7(21.2/24.7)
DECIMAL GEAR HEAD		0.18(6.3)
GEAR HEAD	S6 □ A3 □ ~ S6 □ A18 □	0.24(8.5)
	S6 □ A20 □ ~ S6 □ A40 □	0.30(10.6)
	S6 □ A50 □ ~ S6 □ A250 □	0.33(11.6)

▼ SPEC for output shaft of gearhead-(Table3)

MODEL	TYPES OF OUTPUT SHAFT
STRAIGHT TYPE	
S6SA3 □ ~ S6SA250 □	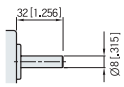
D-CUT TYPE	
S6DA3 □ ~ S6DA250 □	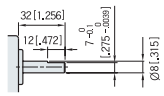
KEY TYPE	
S6KA3 □ ~ S6KA250 □	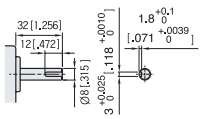

▼ KEY SPEC

GEAR HEAD

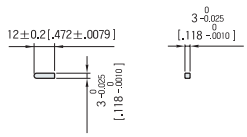

GEAR HEAD RATED LOAD

1. S6D06-24A

MODEL	GEAR RATIO	3	3.6	5	6	7.5	9	10	12.5	15	18	20	25	30	36	40	50	60	75	90	100	120	150	180	200	250
	No Load rpm	1067	889	640	533	427	356	320	256	213	178	160	128	107	89	80	64	53	43	36	32	27	21	18	16	13
S6DA□B	N-m	0.05	0.06	0.08	0.10	0.12	0.14	0.16	0.20	0.24	0.29	0.29	0.36	0.43	0.51	0.57	0.64	0.77	0.96	1.16	1.29	1.54	1.93	2.31	2.57	2.94
	oz-in	6.7	8.1	11.2	13.5	16.9	20.2	22.5	28.1	33.7	40.5	40.5	50.6	60.7	72.8	80.9	91.0	109.3	136.6	163.9	182.1	218.5	273.1	327.8	364.2	416.3
	kgf · cm	0.5	0.6	0.8	1.0	1.2	1.5	1.6	2.0	2.4	2.9	2.9	3.6	4.4	5.2	5.8	6.6	7.9	9.8	11.8	13.1	15.7	19.7	23.6	26.2	30.0

2. S6D10-24A

MODEL	GEAR RATIO	3	3.6	5	6	7.5	9	10	12.5	15	18	20	25	30	36	40	50	60	75	90	100	120	150	180	200	250
	No Load rpm	1100	917	660	550	440	367	330	264	220	183	165	132	110	92	83	66	55	44	37	33	28	22	18	17	13
S6DA□B	N-m	0.08	0.09	0.13	0.16	0.20	0.24	0.26	0.33	0.39	0.47	0.47	0.59	0.71	0.85	0.94	1.06	1.27	1.59	1.91	2.12	2.55	2.94	2.94	2.94	2.94
	oz-in	11.1	13.4	18.5	22.3	27.8	33.4	37.1	46.4	55.6	66.8	66.8	83.5	100.2	120.2	133.5	150.2	180.3	225.3	270.4	300.5	360.5	416.3	416.3	416.3	416.3
	kgf · cm	0.8	1.0	1.3	1.6	2.0	2.4	2.7	3.3	4.0	4.8	4.8	6.0	7.2	8.7	9.6	10.8	13.0	16.2	19.5	21.7	26.0	30.0	30.0	30.0	30.0

■ The code in ■ of gearhead model is for gear ratio
■ It is the permissible torque of the assembled motor and gearhead
The permissible torque of the combination of the regular gearhead and the inter-decimal gearhead is 30kgf · cm.
■ ■ color indicates that the output shaft of the geared motor rotates in the same direction as the output shaft of the motor.
Others indicate rotation in the opposite direction.
■ No Load rpm equals Motor no load rpm divided by gear ratio. The actual rotation speed is less 2-20% than the displayed value according to the load
■ There is no marked the 'L' code for it is an exclusive use.

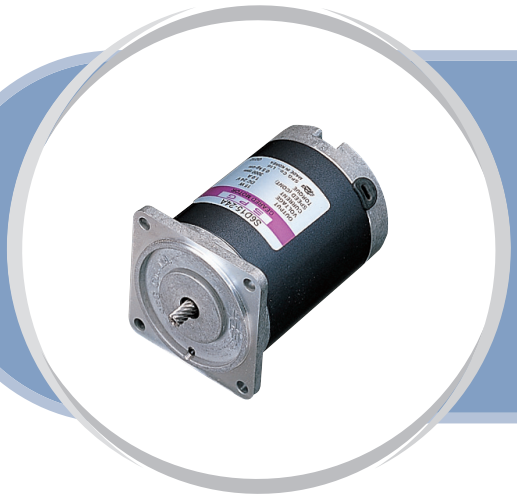

STANDARD TYPE

S6D SERIES [15W]

MOTOR DIMENSION

UNIT : mm[inch]

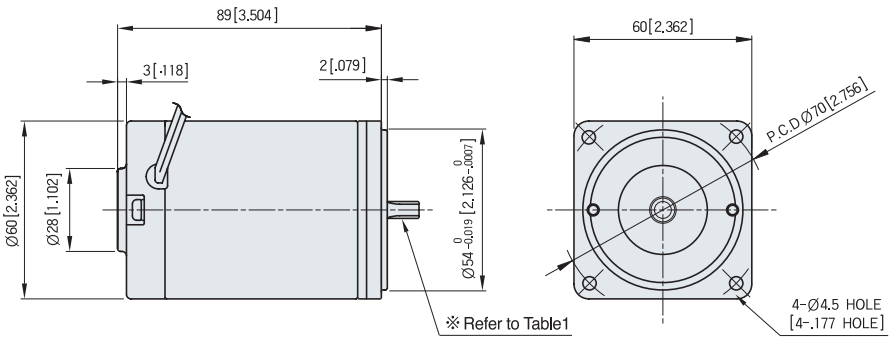

CHARACTERISTIC CURVE

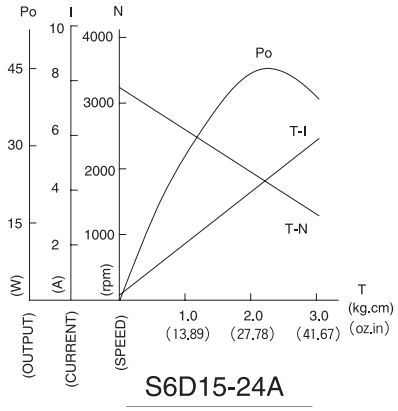

▼ SPEC for output shaft of motor-(Table 1)

MODEL	GEARED TYPE	STRAIGHT TYPE	D-CUT TYPE
	S6D15-□A	S6D15-□S	S6D15-□D
TYPE OF OUTPUT SHAFT	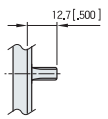	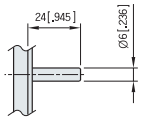	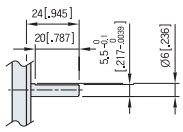

CIRCUIT DIAGRAM

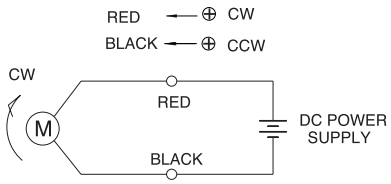

The direction of motor rotation is as viewed from the front shaft end of the motor

MOTOR SPECIFICATION

(Voltage : DC 24V)

Type	Voltage	Output	No Load		At Rated Lod				Run Duty	Weight
			Speed	Current(MAX.)	Speed	Torque		Current		
	V	W	RPM	A	RPM			A	Hr	Kg
S6D15-12□	12	15	3200	0.80	2950	0.049	N-m	2.00	2000	0.6
						6.9	oz-in			
						0.50	kgf · cm			
S6D15-24□	24	15	3300	0.40	3000	0.049	N-m	1.00	2000	0.6
						6.9	oz-in			
						0.50	kgf · cm			
S6D15-90□	90	15	3200	0.20	3000	0.049	N-m	0.30	2000	0.6
						6.9	oz-in			
						0.50	kgf · cm			

※ Run duty is valued at rated Voltage and No load

GEARED MOTOR SPECIFICATION

UNIT : mm[inch]

▼ GEARED MOTOR

※ MOTOR MODEL : S6D15-□A
※ HEAD MODEL : S6□A3□~S6□A250□

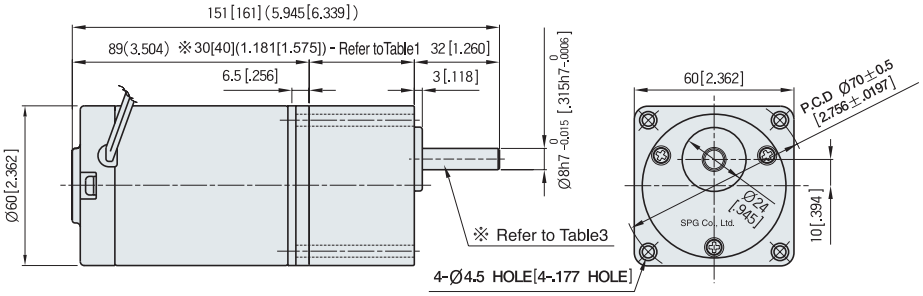

▼ INTER-DECIMAL GEAR HEAD

※ MODEL : S6GX10B

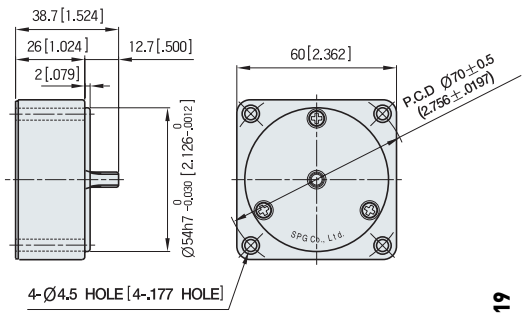

▼ ※30(40) - (Table1)

GEAR RATIO	SIZE:mm[inch]
S6 □ A3 □ ~ S6 □ A18 □	30[1.181]
S6 □ A20 □ ~ S6 □ A250 □	40[1.575]

▼ WEIGHT - (Table2)

PART		WEIGHT:kg(oz)
MOTOR		0.9(31.7)
DECIMAL GEAR HEAD		0.18(6.3)
GEAR HEAD	S6 □ A3 □ ~ S6 □ A18 □	0.24(8.5)
	S6 □ A20 □ ~ S6 □ A40 □	0.30(10.6)
	S6 □ A50 □ ~ S6 □ A250 □	0.33(11.6)

▼ SPEC for output shaft of gearhead-(Table3)

MODEL	TYPES OF OUTPUT SHAFT
STRAIGHT TYPE	
S6SA3 □ ~ S6SA250 □	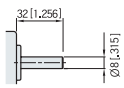
D-CUT TYPE	
S6DA3 □ ~ S6DA250 □	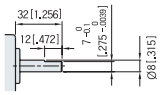
KEY TYPE	
S6KA3 □ ~ S6KA250 □	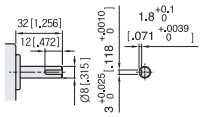

▼ KEY SPEC

GEAR HEAD

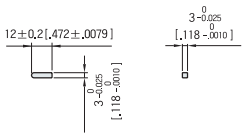

GEAR HEAD RATED LOAD

S6D15-24A

MODEL	GEAR RATIO	3	3.6	5	6	7.5	9	10	12.5	15	18	20	25	30	36	40	50	60	75	90	100	120	150	180	200	250
	No Load rpm	1100	917	660	550	440	367	330	264	220	183	165	132	110	92	83	66	55	44	37	33	28	22	18	17	13
S6DA□B	N-m	0.12	0.14	0.20	0.24	0.30	0.36	0.40	0.50	0.60	0.71	0.71	0.89	1.07	1.29	1.43	1.61	1.93	2.41	2.89	2.94	2.94	2.94	2.94	2.94	2.94
	oz-in	16.9	20.2	28.1	33.7	42.2	50.6	56.2	70.3	84.3	101.2	101.2	126.5	151.7	182.1	202.3	227.6	273.1	341.4	409.7	416.3	416.3	416.3	416.3	416.3	416.3
	kgf · cm	1.2	1.5	2.0	2.4	3.0	3.6	4.1	5.1	6.1	7.3	7.3	9.1	10.9	13.1	14.6	16.4	19.7	24.6	29.5	30.0	30.0	30.0	30.0	30.0	30.0

■ The code in ■ of gearhead model is for gear ratio
■ It is the permissible torque of the assembled motor and gearhead
The permissible torque of the combination of the regular gearhead and the inter-decimal gearhead is 30kgf · cm.
■ ■ color indicates that the output shaft of the geared motor rotates in the same direction as the output shaft of the motor.
Others indicate rotation in the opposite direction.
■ No Load rpm equals Motor no load rpm divided by gear ratio. The actual rotation speed is less 2-20% than the displayed value according to the load
■ There is no marked the 'L' code for it is an exclusive use.

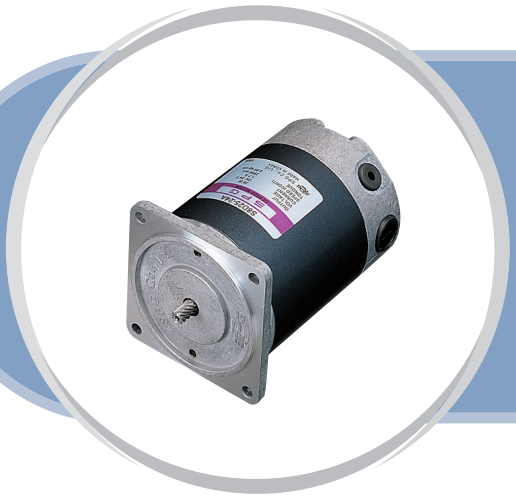

STANDARD TYPE

S8D SERIES [25~40W]

MOTOR DIMENSION

UNIT : mm[inch]

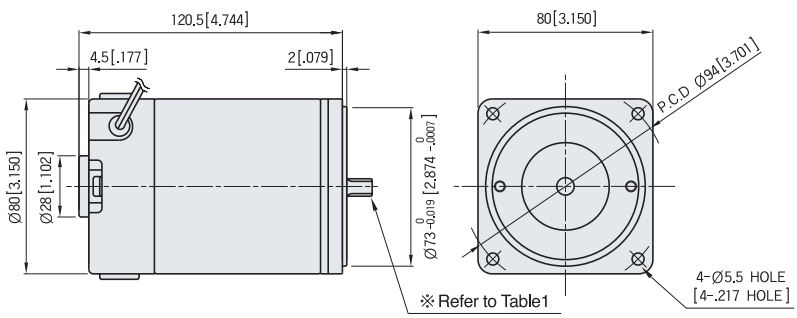

▼ SPEC for output shaft of motor-(Table 1)

MODEL	GEARED TYPE	STRAIGHT TYPE	D-CUT TYPE	KEY TYPE
	S8D25-□A S8D40-□A	S8D25-□S S8D40-□S	S8D25-□D S8D40-□D	S8D25-□K S8D40-□K
TYPE OF OUTPUT SHAFT	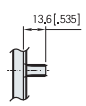	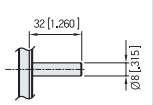	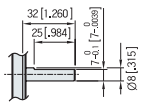	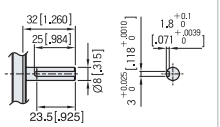

CHARACTERISTIC CURVE

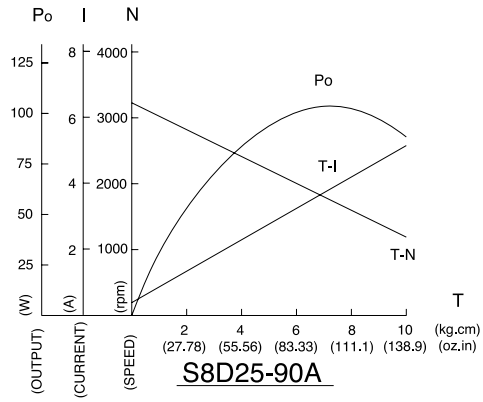

CIRCUIT DIAGRAM

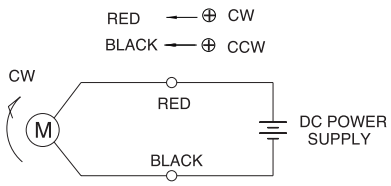

The direction of motor rotation is as viewed from the front shaft end of the motor

MOTOR SPECIFICATION

(Voltage : DC 24V)

Type	Voltage	Output	No Load		At Rated Lod				Run Duty	Weight
			Speed	Current(MAX.)	Speed	Torque		Current		
	V	W	RPM	A	RPM			A	Hr	Kg
S8D25-12□	12	25	3200	1.40	3100	0.078	N-m	3.80	2000	1.7
						11.1	oz-in			
						0.80	kgf · cm			
S8D25-24□	24	25	3000	0.70	2850	0.083	N-m	1.70	2000	1.7
						11.8	oz-in			
						0.85	kgf · cm			
S8D25-90□	90	25	3200	0.20	3000	0.078	N-m	0.50	2000	1.7
						11.1	oz-in			
						0.80	kgf · cm			
S8D40-12□	12	40	3200	2.50	2900	0.132	N-m	7.40	2000	1.7
						18.7	oz-in			
						1.35	kgf · cm			
S8D40-24□	24	40	3100	0.80	3000	0.127	N-m	2.30	2000	1.7
						18.0	oz-in			
						1.30	kgf · cm			
S8D40-90□	90	40	3200	0.30	3000	0.127	N-m	0.70	2000	1.8
						18.0	oz-in			
						1.30	kgf · cm			

※ Run duty is valued at rated Voltage and No load

GEARED MOTOR SPECIFICATION

UNIT : mm[inch]

▼ GEARED MOTOR ※ MOTOR MODEL : S8D25-□A, S8D40-□A
※ HEAD MODEL : S8□A3□~S8□A200□

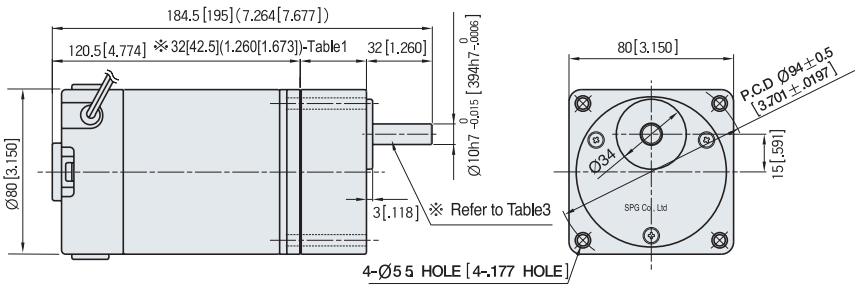

▼ INTER-DECIMAL GEAR HEAD
※ MODEL : S8GX10B

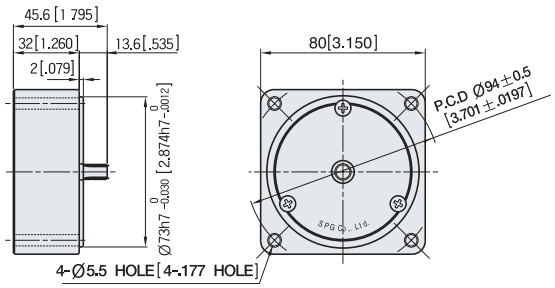

▼ ※30(40) - (Table1)

GEAR RATIO	SIZE:mm[inch]
S8 □ A3 □ ~ S6 □ A18 □	32[1.260]
S8 □ A20 □ ~ S6 □ A250 □	42.5[1.673]

▼ WEIGHT - (Table2)

PART		WEIGHT:kg(oz)
MOTOR		1.7/1.8(60.0/63.5)
DECIMAL GEAR HEAD		0.43(15.2)
GEAR HEAD	S8 □ A3 □ ~ S8 □ A18 □	0.43(15.2)
	S8 □ A20 □ ~ S8 □ A40 □	0.57(20.1)
	S8 □ A50 □ ~ S8 □ A250 □	0.61(21.5)

▼ SPEC for output shaft of gearhead-(Table3)

MODEL	TYPES OF OUTPUT SHAFT
STRAIGHT TYPE	
S8SA3 □ ~ S8SA250 □	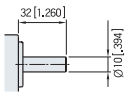
D-CUT TYPE	
S8DA3 □ ~ S8DA250 □	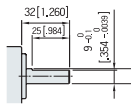
KEY TYPE	
S8KA3 □ ~ S8KA250 □	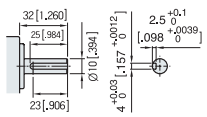

▼ KEY SPEC

GEAR HEAD	MOTOR
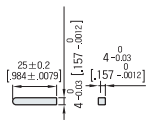	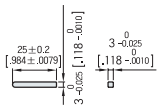

GEAR HEAD RATED LOAD

S8D25-90A

MODEL	GEAR RATIO	3	3.6	5	6	7.5	9	10	12.5	15	18	20	25	30	36	40	50	60	75	90	100	120	150	180	200
	No Load rpm	1067	889	640	533	427	356	320	256	213	178	160	128	107	89	80	64	53	43	36	32	27	21	18	16
S8KA□B	N-m	0.19	0.23	0.32	0.38	0.48	0.57	0.64	0.79	0.95	1.14	1.14	1.43	1.71	2.06	2.29	2.57	3.09	3.86	4.63	5.14	6.17	7.72	7.84	7.84
	oz-in	27.0	32.4	45.0	54.0	67.4	80.9	89.9	112.4	134.9	161.9	161.9	202.3	242.8	291.3	323.7	364.2	437.0	546.3	655.5	728.4	874.0	1092.5	1110.1	1110.1
	kgf · cm	1.9	2.3	3.2	3.9	4.9	5.8	6.5	8.1	9.7	11.7	11.7	14.6	17.5	21.0	23.3	26.2	31.5	39.4	47.2	52.5	63.0	78.7	80.0	80.0

S8D40-90A

MODEL	GEAR RATIO	3	3.6	5	6	7.5	9	10	12.5	15	18	20	25	30	36	40	50	60	75	90	100	120	150	180	200
	No Load rpm	1067	889	640	533	427	356	320	256	213	178	160	128	107	89	80	64	53	43	36	32	27	21	18	16
S8KA□B	N-m	0.31	0.37	0.52	0.62	0.77	0.93	1.03	1.29	1.55	1.86	1.86	2.32	2.79	3.34	3.71	4.18	5.02	6.27	7.52	7.84	7.84	7.84	7.84	7.84
	oz-in	43.8	52.6	73.1	87.7	109.6	131.5	146.1	182.7	219.2	263.0	263.0	328.8	394.5	473.4	526.0	591.8	710.2	887.7	1065.2	1110.1	1110.1	1110.1	1110.1	1110.1
	kgf · cm	3.2	3.8	5.3	6.3	7.9	9.5	10.5	13.2	15.8	19.0	19.0	23.7	28.4	34.1	37.9	42.6	51.2	64.0	76.8	80.0	80.0	80.0	80.0	80.0

■ The code in ■ of gearhead model is for gear ratio
■ It is the permissible torque of the assembled motor and gearhead
The permissible torque of the combination of the regular gearhead and the inter-decimal gearhead is 30kgf · cm.
■ ■ color indicates that the output shaft of the geared motor rotates in the same direction as the output shaft of the motor.
Others indicate rotation in the opposite direction.
■ No Load rpm equals Motor no load rpm divided by gear ratio. The actual rotation speed is less 2-20% than the displayed value according to the load
■ There is no marked the 'L' code for it is an exclusive use.

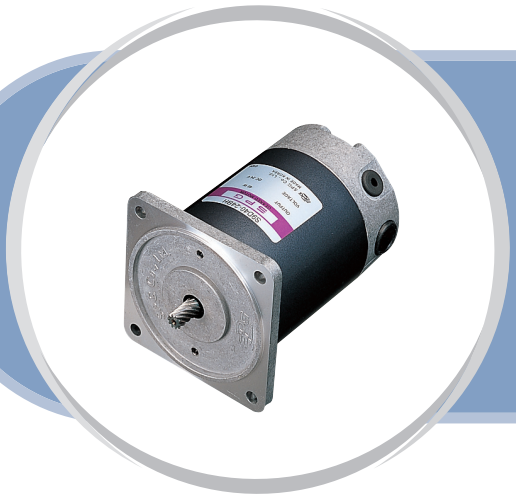

STANDARD TYPE

S9D SERIES [40W]

MOTOR DIMENSION

UNIT : mm[inch]

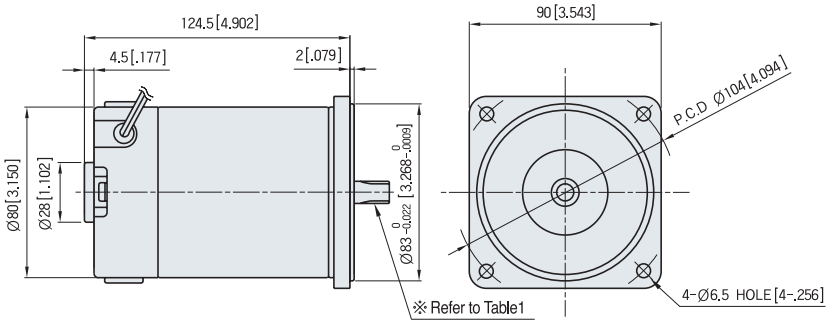

▼ SPEC for output shaft of motor-(Table 1)

MODEL	GEARED TYPE	STRAIGHT TYPE	D-CUT TYPE	KEY TYPE
	S9D40-□BH	S9D40-□S	S9D40-□D	S9D40-□K
TYPE OF OUTPUT SHAFT	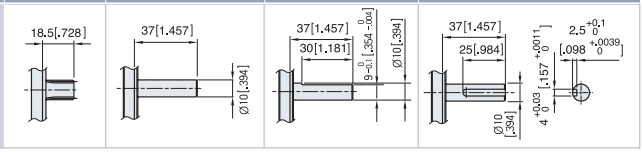			

CHARACTERISTIC CURVE

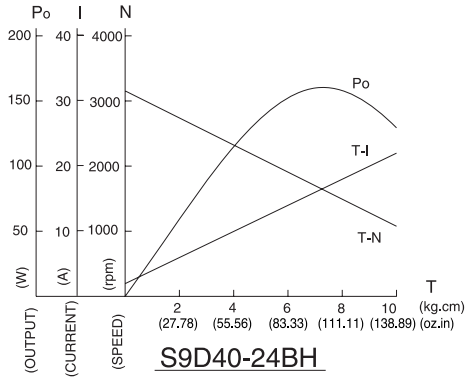

CIRCUIT DIAGRAM

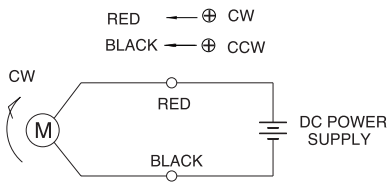

The direction of motor rotation is as viewed from the front shaft end of the motor

MOTOR SPECIFICATION

(Voltage : DC 24V)

Type	Voltage	Output	No Load		At Rated Lod				Run Duty	Weight
			Speed	Current(MAX.)	Speed	Torque		Current		
	V	W	RPM	A	RPM			A	Hr	Kg
S9D40-12□	12	40	3100	2.5	2800	0.137	N-m	6.0	2000	1.8
						19.4	oz-in			
						1.40	kgf · cm			
S9D40-24□	24	40	3100	1.5	2900	0.132	N-m	3.0	2000	1.8
						18.7	oz-in			
						1.35	kgf · cm			
S9D40-90□	90	40	3200	0.3	3000	0.127	N-m	0.7	2000	1.8
						18.0	oz-in			
						1.30	kgf · cm			

※ Run duty is valued at rated Voltage and No load

GEARED MOTOR SPECIFICATION

UNIT : mm[inch]

▼ GEARED MOTOR ※ MOTOR MODEL : S9□40-□B□
※ HEAD MODEL : S9□B3□□~S9□B200□□

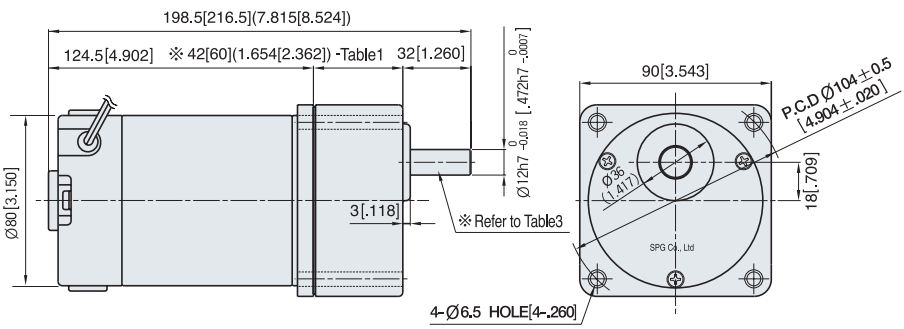

▼ INTER-DECIMAL GEAR HEAD
※ MODEL : S9GX10B(H,L)

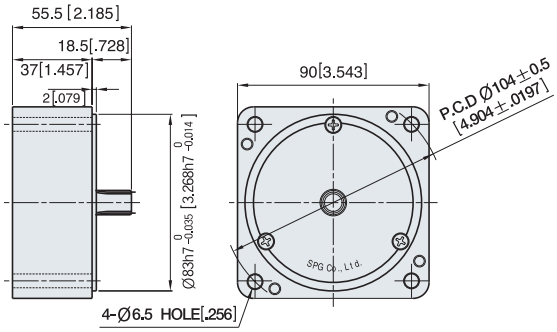

▼ ※30(40) - (Table1)

GEAR RATIO	SIZE:mm[inch]
S9 □ B3□□ ~S9 □ B18 □□	42[1.654]
S9 □ B20 □□ ~S9 □ B200 □□	60[2.362]

▼ WEIGHT - (Table2)

PART		WEIGHT:kg(oz)
MOTOR		0.6/0.7
DECIMAL GEAR HEAD		0.60(21.2)
GEAR HEAD	S9 □ B3 □□ ~ S9 □ B18 □□	0.73(25.7)
	S9 □ B20 □□ ~ S9 □ B40 □□	1.03(36.3)
	S9 □ B50 □□ ~ S9 □ B200 □□	1.13(39.9)

▼ SPEC for output shaft of gearhead-(Table3)

MODEL	TYPES OF OUTPUT SHAFT
STRAIGHT TYPE	
S9SB3 □□ ~S9SB200 □□	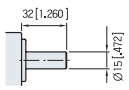
D-CUT TYPE	
S9DB3 □□ ~S9DB200 □□	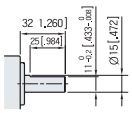
KEY TYPE	
S9KB3 □□ ~S9KB200 □□	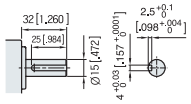

▼ KEY SPEC

GEAR HEAD	MOTOR
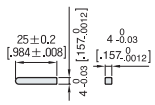	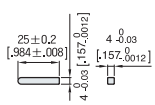

GEAR HEAD RATED LOAD

S9D40-24BH

MODEL	GEAR RATIO	3	3.6	5	6	7.5	9	10	12.5	15	18	20	25	30	36	40	50	60	75	90	100	120	150	180	200
	No Load rpm	1033	861	620	517	413	344	310	248	207	172	155	124	103	86	78	62	52	41	34	31	26	21	17	16
S8KA□B	N-m	0.32	0.39	0.54	0.64	0.80	0.96	1.07	1.34	1.61	1.93	1.93	2.41	2.89	3.47	3.86	4.34	5.21	6.51	7.81	8.68	9.80	9.80	9.80	9.80
	oz-in	45.5	54.6	75.9	91.0	113.8	136.6	151.7	189.7	227.6	273.1	273.1	341.4	409.7	491.6	546.3	614.6	737.5	921.8	1106.2	1229.1	1387.7	1387.7	1387.7	1387.7
	kgf · cm	3.3	3.9	5.5	6.6	8.2	9.8	10.9	13.7	16.4	19.7	19.7	24.6	29.5	35.4	39.4	44.3	53.1	66.4	79.7	88.6	100.0	100.0	100.0	100.0

■ The code in ■ of gearhead model is for gear ratio
■ It is the permissible torque of the assembled motor and gearhead
The permissible torque of the combination of the regular gearhead and the inter-decimal gearhead is 30kgf · ㎝.
■ ■ color indicates that the output shaft of the geared motor rotates in the same direction as the output shaft of the motor.
Others indicate rotation in the opposite direction.
■ No Load rpm equals Motor no load rpm divided by gear ratio. The actual rotation speed is less 2-20% than the displayed value according to the load
■ There is no marked the 'L' code for it is an exclusive use.

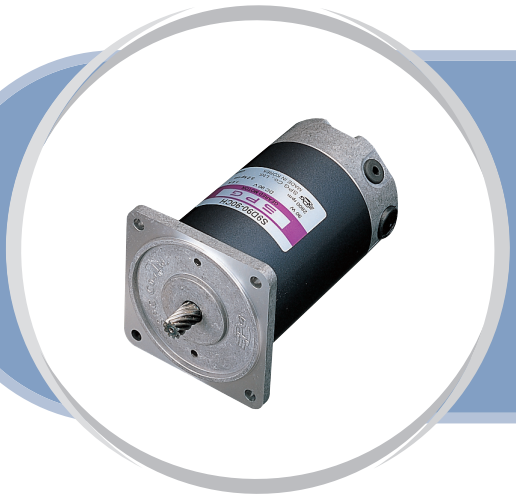

STANDARD TYPE

S9D SERIES [60~120W]

MOTOR DIMENSION

UNIT : mm[inch]

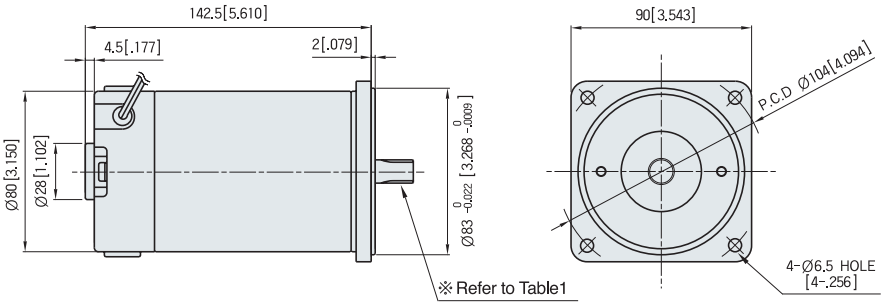

CHARACTERISTIC CURVE

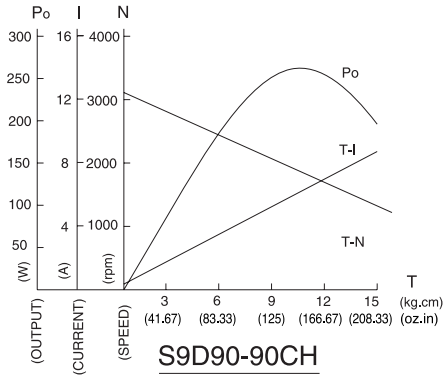

▼ SPEC for output shaft of motor-(Table 1)

MODEL	GEARED TYPE	STRAIGHT TYPE	D-CUT TYPE	KEY TYPE
	S9D60-□CH S9D90-□CH S9D120-□CH	S9D60-□S S9D90-□S S9D120-□S	S9D60-□D S9D90-□D S9D120-□D	S9D60-□K S9D90-□K S9D120-□K
TYPE OF OUTPUT SHAFT	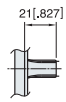	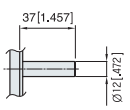	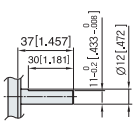	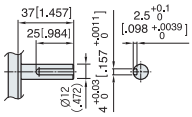

CIRCUIT DIAGRAM

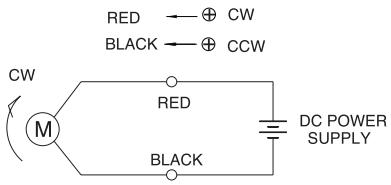

The direction of motor rotation is as viewed from the front shaft end of the motor

MOTOR SPECIFICATION

(Voltage : DC 24V)

Type	Voltage	Output	No Load		At Rated Lod				Run Duty	Weight
			Speed	Current(MAX.)	Speed	Torque		Current		
	V	W	RPM	A	RPM			A	Hr	Kg
S9D60-12□	12	60	3000	2.5	2650	0.216 30.5 2.20	N-m oz-in kgf · cm	7.9	2000	2.2
S9D60-24□	24	60	3000	1.2	2800	0.206 29.1 2.10	N-m oz-in kgf · cm	3.6	2000	2.2
S9D60-90□	90	60	3100	0.3	2900	0.196 27.8 2.00	N-m oz-in kgf · cm	1.0	2000	2.2
S9D90-12□	12	90	3100	3.0	2750	0.314 44.4 3.20	N-m oz-in kgf · cm	10.5	2000	2.2
S9D90-24□	24	90	3250	2.4	2920	0.304 43.0 3.10	N-m oz-in kgf · cm	5.6	2000	2.2
S9D90-90□	90	90	3100	0.3	2800	0.314 44.4 3.20	N-m oz-in kgf · cm	1.4	2000	2.2
S9D120-12□	12	120	3300	3.5	2800	0.412 58.3 4.20	N-m oz-in kgf · cm	14.9	2000	2.2
S9D120-24□	24	120	3300	2.0	2920	0.392 55.5 4.00	N-m oz-in kgf · cm	7.1	2000	2.2
S9D120-90□	90	120	3000	0.3	2600	0.441 62.4 4.50	N-m oz-in kgf · cm	2.0	2000	2.2

※ Run duty is valued at rated Voltage and No load

GEARED MOTOR SPECIFICATION

UNIT : mm[inch]

▼ GEARED MOTOR

※ MOTOR MODEL : S9D60-□CH, S9D90-□CH, S9D120-□CH
※ HEAD MODEL : S9□C3B□-S~S9□C200B□-S

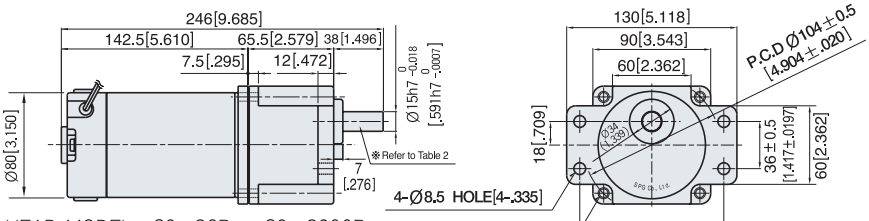

※ HEAD MODEL : S9□C3B□~S9□C200B□

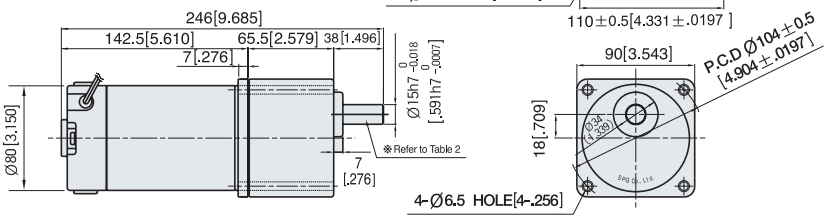

▼ INTER-DECIMAL GEAR HEAD

※ MODEL : S9GX10B(H,L)-S

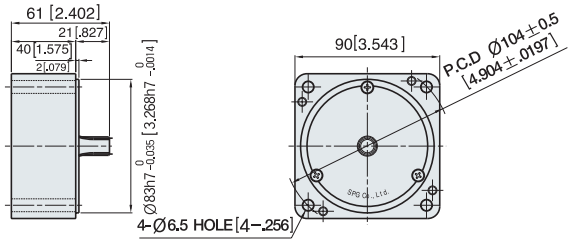

▼ ※30(40) - (Table1)

PART		WEIGHT:kg(oz)
MOTOR		2.2(77.6)
DECIMAL GEAR HEAD		0.65(22.9)
GEAR HEAD	S9 □ C3B □ ~S9 □ C10B □	1.21(42.7)
	S9 □ C12.5B □ ~S9 □ C20B □	1.30(45.9)
	S9 □ C25B □ ~S9 □ C60B□	1.40(49.4)
	S9 □ C75B □ ~S9 □ C200B□	1.45(51.1)

▼ SPEC for output shaft of gearhead-(Table2)

MODEL	TYPES OF OUTPUT SHAFT
STRAIGHT TYPE	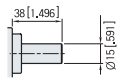
S9SC3BH ~S9SC200BH	
D-CUT TYPE	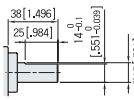
S9DC3BH ~S9DC200BH	
KEY TYPE	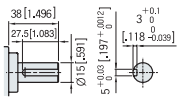
S9KC3BH ~S9KC200BH	

▼ KEY SPEC

GEAR HEAD	MOTOR
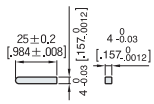	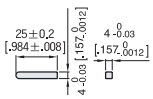

GEAR HEAD RATED LOAD

S9D60-90CH

MODEL	GEAR RATIO	3	3.6	5	6	7.5	9	10	12.5	15	18	20	25	30	36	40	50	60	75	90	100	120	150	180	200
	No Load rpm	1033	861	620	517	413	344	310	248	207	172	155	124	103	86	78	62	52	41	34	31	26	21	17	16
S9KC□ B() S9KC□ B()-S	N-m	0.48	0.57	0.79	0.95	1.19	1.43	1.59	1.79	2.14	2.57	2.86	3.21	3.86	4.63	5.14	6.43	7.72	8.68	10.42	11.57	13.89	17.36	19.60	19.60
	oz-in	67.4	80.9	112.4	134.9	168.6	202.3	224.8	252.9	303.5	364.2	404.6	455.2	546.3	655.5	728.4	910.5	1092.5	1229.1	1474.9	1638.8	1966.6	2458.2	2775.4	2775.4
	kgf · cm	4.9	5.8	8.1	9.7	12.2	14.6	16.2	18.2	21.9	26.2	29.2	32.8	39.4	47.2	52.5	65.6	78.7	88.6	106.3	118.1	141.7	177.1	200.0	200.0

S9D90-90CH

MODEL	GEAR RATIO	3	3.6	5	6	7.5	9	10	12.5	15	18	20	25	30	36	40	50	60	75	90	100	120	150	180	200
	No Load rpm	1033	861	620	517	413	344	310	248	207	172	155	124	103	86	78	62	52	41	34	31	26	21	17	16
S9KC□ B() S9KC□ B()-S	N-m	0.76	0.91	1.27	1.52	1.91	2.29	2.54	2.86	3.43	4.12	4.57	5.14	6.17	7.41	8.23	10.29	12.35	13.89	16.67	18.52	19.60	19.60	19.60	19.60
	oz-in	107.9	129.5	179.8	215.8	269.8	323.7	359.7	404.6	485.6	582.7	647.4	728.4	874.0	1048.8	1165.4	1456.7	1748.1	1966.6	2359.9	2622.1	2775.4	2775.4	2775.4	2775.4
	kgf · cm	7.8	9.3	13.0	15.6	19.4	23.3	25.9	29.2	35.0	42.0	46.7	52.5	63.0	75.6	84.0	105.0	126.0	141.7	170.1	189.0	200.0	200.0	200.0	200.0

S9D120-90CH

MODEL	GEAR RATIO	3	3.6	5	6	7.5	9	10	12.5	15	18	20	25	30	36	40	50	60	75	90	100	120	150	180	200
	No Load rpm	1000	833	600	500	400	333	300	240	200	167	150	120	100	83	75	60	50	40	33	30	25	20	17	15
S9KC□ BH S9KC□ BH-S	N-m	1.07	1.29	1.79	2.14	2.68	3.21	3.57	4.02	4.82	5.79	6.43	7.23	8.68	10.42	11.57	14.47	17.36	19.53	19.60	19.60	19.60	19.60	19.60	19.60
	oz-in	151.7	182.1	252.9	303.5	379.4	455.2	505.8	569.0	682.8	819.4	910.5	1024.3	1229.1	1474.9	1638.8	2048.5	2458.2	2765.5	2775.4	2775.4	2775.4	2775.4	2775.4	2775.4
	kgf · cm	10.9	13.1	18.2	21.9	27.3	32.8	36.5	41.0	49.2	59.0	65.6	73.8	88.6	106.3	118.1	147.6	177.1	199.3	200.0	200.0	200.0	200.0	200.0	200.0

■ The code in ■ of gearhead model is for gear ratio
■ It is the permissible torque of the assembled motor and gearhead
The permissible torque of the combination of the regular gearhead and the inter-decimal gearhead is 30kgf · cm.
■ ■ color indicates that the output shaft of the geared motor rotates in the same direction as the output shaft of the motor.
Others indicate rotation in the opposite direction.
■ No Load rpm equals Motor no load rpm divided by gear ratio. The actual rotation speed is less 2-20% than the displayed value according to the load
■ There is no marked the 'L' code for it is an exclusive use.

GEARED MOTOR SPECIFICATION

UNIT : mm[inch]

▼ GEARED MOTOR ※ MOTOR MODEL : S9D60-□CH, S9D90-□CH, S9D120-□CH
※ HEAD MODEL : S9□D3B~S9□D200B

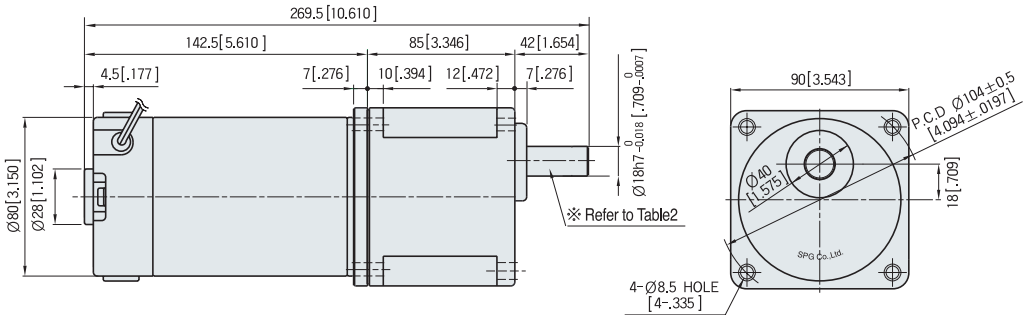

▼ ※30(40) - (Table1)

PART		WEIGHT:kg(oz)
MOTOR		2.2(77.6)
GEAR HEAD	S9 □ D3B ~S9 □ D10B	1.65(58.2)
	S9 □ D12.5B ~S9 □ D20B	1.80(63.5)
	S9 □ D25B ~S9 □ D60B	1.90(67.0)
	S9 □ D75B ~S9 □ D200B	1.95(68.8)

▼ SPEC for output shaft of gearhead-(Table2)

MODEL	TYPES OF OUTPUT SHAFT
STRAIGHT TYPE	
S9SD3B ~S9SD200B	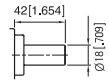
D-CUT TYPE	
S9DD3B □□ ~S9DD200B □□	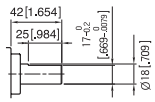
KEY TYPE	
S9KD3B □□ ~S9KD200B □□	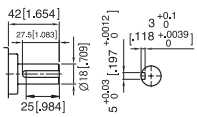

▼ KEY SPEC

GEAR HEAD	MOTOR
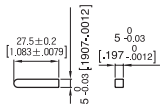	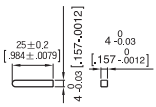

GEAR HEAD RATED LOAD

S9D60-90CH

MODEL	GEAR RATIO	3	3.6	5	6	7.5	9	10	12.5	15	18	20	25	30	36	40	50	60	75	90	100	120	150	180	200
	No Load rpm	1033	861	620	517	413	344	310	248	207	172	155	124	103	86	78	62	52	41	34	31	26	21	17	16
S9KD□ B	N-m	0.48	0.57	0.79	0.95	1.19	1.43	1.59	1.79	2.14	2.57	2.86	3.21	3.86	4.63	5.14	6.43	7.72	8.68	10.42	11.57	13.89	17.36	20.83	23.15
	oz-in	67.4	80.9	112.4	134.9	168.6	202.3	224.8	252.9	303.5	364.2	404.6	455.2	546.3	655.5	728.4	910.5	1092.5	1229.1	1474.9	1638.8	1966.6	2458.2	2949.9	3277.6
	kgf · cm	4.9	5.8	8.1	9.7	12.2	14.6	16.2	18.2	21.9	26.2	29.2	32.8	39.4	47.2	52.5	65.6	78.7	88.6	106.3	118.1	141.7	177.1	212.6	236.2

S9D90-90CH

MODEL	GEAR RATIO	3	3.6	5	6	7.5	9	10	12.5	15	18	20	25	30	36	40	50	60	75	90	100	120	150	180	200
	No Load rpm	1033	861	620	517	413	344	310	248	207	172	155	124	103	86	78	62	52	41	34	31	26	21	17	16
S9KD□ B	N-m	0.76	0.91	1.27	1.52	1.91	2.29	2.54	2.86	3.43	4.12	4.57	5.14	6.17	7.41	8.23	10.29	12.35	13.89	16.67	18.52	22.22	27.78	29.40	29.40
	oz-in	107.9	129.5	179.8	215.8	269.8	323.7	359.7	404.6	485.6	582.7	647.4	728.4	874.0	1048.8	1165.4	1456.7	1748.1	1966.6	2359.9	2622.1	3146.5	3933.2	4163.0	4163.0
	kgf · cm	7.8	9.3	13.0	15.6	19.4	23.3	25.9	29.2	35.0	42.0	46.7	52.5	63.0	75.6	84.0	105.0	126.0	141.7	170.1	189.0	226.7	283.4	300.0	300.0

S9D120-90CH

MODEL	GEAR RATIO	3	3.6	5	6	7.5	9	10	12.5	15	18	20	25	30	36	40	50	60	75	90	100	120	150	180	200
	No Load rpm	1000	833	600	500	400	333	300	240	200	167	150	120	100	83	75	60	50	40	33	30	25	20	17	15
S9KD□ B	N-m	1.07	1.29	1.79	2.14	2.68	3.21	3.57	4.02	4.82	5.79	6.43	7.23	8.68	10.42	11.57	14.47	17.36	19.53	23.44	26.04	29.40	29.40	29.40	29.40
	oz-in	151.7	182.1	252.9	303.5	379.4	455.2	505.8	569.0	682.8	819.4	910.5	1024.3	1229.1	1474.9	1638.8	2048.5	2458.2	2765.5	3318.6	3687.4	4163.0	4163.0	4163.0	4163.0
	kgf · cm	10.9	13.1	18.2	21.9	27.3	32.8	36.5	41.0	49.2	59.0	65.6	73.8	88.6	106.3	118.1	147.6	177.1	199.3	239.1	265.7	300.0	300.0	300.0	300.0

■ The code in ■ of gearhead model is for gear ratio
■ It is the permissible torque of the assembled motor and gearhead
The permissible torque of the combination of the regular gearhead and the inter-decimal gearhead is 30kgf · cm.
■ ■ color indicates that the output shaft of the geared motor rotates in the same direction as the output shaft of the motor.
Others indicate rotation in the opposite direction.
■ No Load rpm equals Motor no load rpm divided by gear ratio. The actual rotation speed is less 2-20% than the displayed value according to the load
■ There is no marked the 'L' code for it is an exclusive use.

STANDARD TYPE

S9D SERIES [150W]

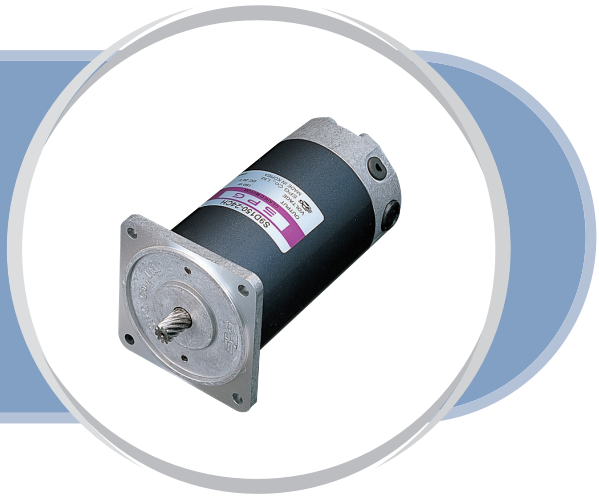

MOTOR DIMENSION

UNIT : mm[inch]

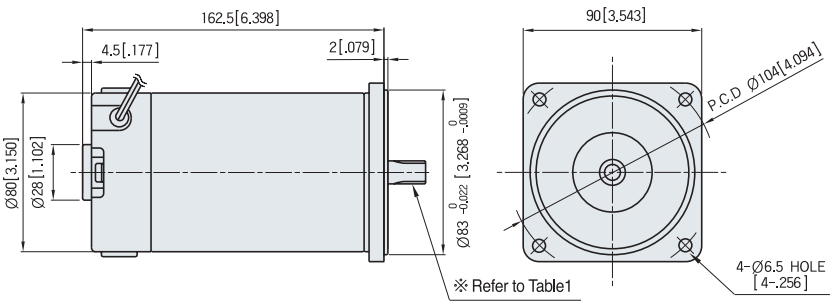

CHARACTERISTIC CURVE

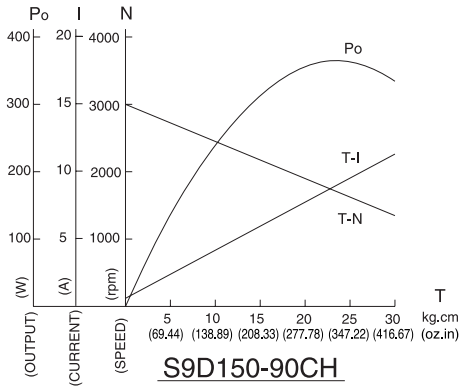

▼ SPEC for output shaft of motor-(Table1)

MODEL	GEARED TYPE	STRAIGHT TYPE	D-CUT TYPE	KEY TYPE
	S9D150-□CH	S9D150-□S	S9D150-□D	S9D150-□K
TYPE OF OUTPUT SHAFT	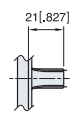	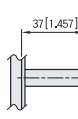	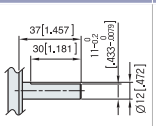	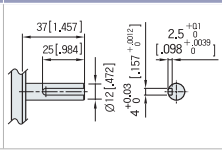

CIRCUIT DIAGRAM

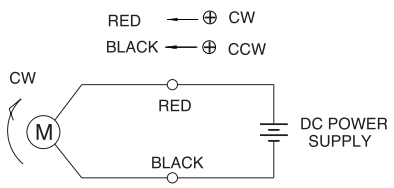

The direction of motor rotation is as viewed from the front shaft end of the motor

MOTOR SPECIFICATION

(Voltage : DC 24V)

Type	Voltage	Output	No Load		At Rated Lod				Run Duty	Weight
			Speed	Current(MAX.)	Speed	Torque		Current		
	V	W	RPM	A	RPM			A	Hr	Kg
S9D150-12□	12	150	3200	3.0	2560	0.559	N-m	20	2000	2.8
						79.1	oz-in			
						5.70	kgf · cm			
S9D150-24□	24	150	3000	2.0	2650	0.539	N-m	8.5	2000	2.8
						76.3	oz-in			
						5.50	kgf · cm			
S9D150-90□	90	150	3000	0.5	2650	0.539	N-m	2.2	2000	2.8
						76.3	oz-in			
						5.50	kgf · cm			

※ Run duty is valued at rated Voltage and No load

GEARED MOTOR SPECIFICATION

UNIT : mm[inch]

▼ GEARED MOTOR ※ MOTOR MODEL : S9D150-□CH
※ HEAD MODEL : S9□C3BH-S~S9□C200BH-S

▼ INTER-DECIMAL GEAR HEAD
※ MODEL : S9GX10BH-S

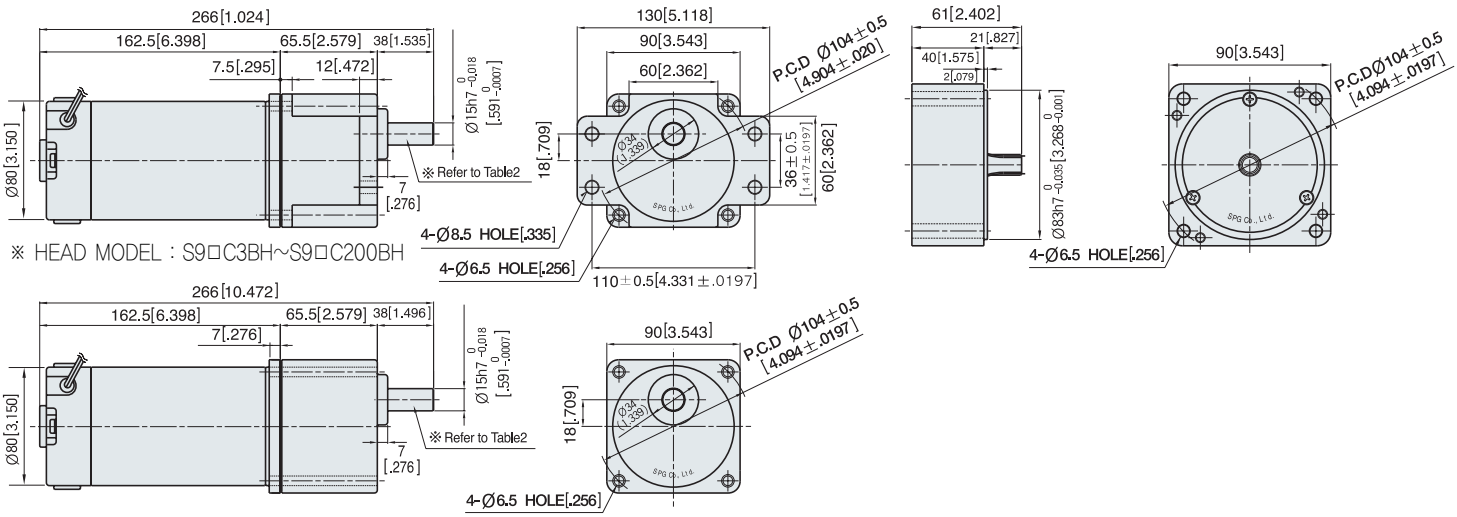

▼ ※30(40) - (Table1)

PART		WEIGHT:kg(oz)
MOTOR		2.8(98.8)
DECIMAL GEAR HEAD		0.65(22.9)
GEAR HEAD	S9 □ C3BH ~S9 □ C10BH	1.21(42.7)
	S9 □ C12.5BH ~S9 □ C20BH	1.30(45.9)
	S9 □ C25BH ~S9 □ C60BH	1.40(49.4)
	S9 □ C75BH ~S9 □ C200BH	1.45(51.1)

▼ SPEC for output shaft of gearhead-(Table2)

MODEL	TYPES OF OUTPUT SHAFT
STRAIGHT TYPE	
S9SC3BH ~S9SC200BH	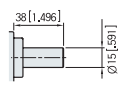
D-CUT TYPE	
S9DC3BH ~S9DC200BH	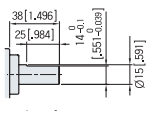
KEY TYPE	
S9KC3BH ~S9KC200BH	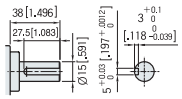

▼ KEY SPEC

GEAR HEAD	MOTOR
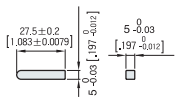	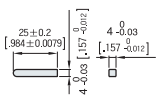

GEAR HEAD RATED LOAD

S9D150-90CH

MODEL	GEAR RATIO	3	3.6	5	6	7.5	9	10	12.5	15	18	20	25	30	36	40	50	60	75	90	100	120	150	180	200
	No Load rpm	1000	833	600	500	400	333	300	240	200	167	150	120	100	83	75	60	50	40	33	30	25	20	17	15
S9KC□ BH S9KC□ BH-S	N-m	1.31	1.57	2.18	2.62	3.27	3.93	4.37	4.91	5.89	7.07	7.86	8.84	10.61	12.73	14.15	17.68	19.60	19.60	19.60	19.60	19.60	19.60	19.60	19.60
	oz-in	185.5	222.6	309.1	370.9	463.7	556.4	618.2	695.5	834.6	1001.5	1112.8	1251.9	1502.3	1802.7	2003.0	2503.8	2775.4	2775.4	2775.4	2775.4	2775.4	2775.4	2775.4	2775.4
	kgf · cm	13.4	16.0	22.3	26.7	33.4	40.1	44.6	50.1	60.1	72.2	80.2	90.2	108.3	129.9	144.3	180.4	200.0	200.0	200.0	200.0	200.0	200.0	200.0	200.0

■ The code in ■ of gearhead model is for gear ratio
■ It is the permissible torque of the assembled motor and gearhead
The permissible torque of the combination of the regular gearhead and the inter-decimal gearhead is 30kgf · cm.
■ ■ color indicates that the output shaft of the geared motor rotates in the same direction as the output shaft of the motor.
Others indicate rotation in the opposite direction.
■ No Load rpm equals Motor no load rpm divided by gear ratio. The actual rotation speed is less 2-20% than the displayed value according to the load
■ There is no marked the 'L' code for it is an exclusive use.

GEARED MOTOR SPECIFICATION

UNIT : mm[inch]

▼ GEARED MOTOR ※ MOTOR MODEL : S9D150-□CH
※ HEAD MODEL : S9□D3B~S9□D200B

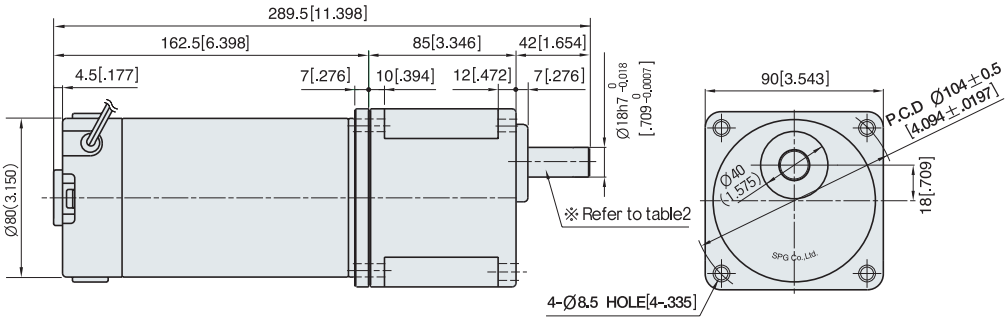

▼ ※30(40) - (Table1)

PART		WEIGHT:kg(oz)
MOTOR		2.2(77.6)
GEAR HEAD	S9 □ D3B ~S9 □ D10B	1.65(58.2)
	S9 □ D12.5B ~S9 □ D20B	1.80(63.5)
	S9 □ D25B ~S9 □ D60B	1.90(67.0)
	S9 □ D75B ~S9 □ D200B	1.95(68.8)

▼ SPEC for output shaft of gearhead-(Table2)

MODEL	TYPES OF OUTPUT SHAFT
STRAIGHT TYPE	
S9SD3B ~S9SD200B	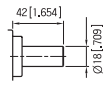
D-CUT TYPE	
S9DD3B ~S9DD200B	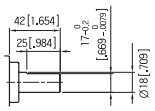
KEY TYPE	
S9KD3B ~S9KD200B	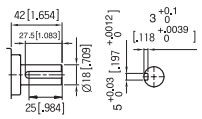

▼ KEY SPEC

GEAR HEAD	MOTOR
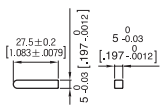	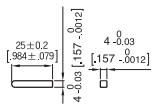

GEAR HEAD RATED LOAD

S9D150-90HH

MODEL	GEAR RATIO	3	3.6	5	6	7.5	9	10	12.5	15	18	20	25	30	36	40	50	60	75	90	100	120	150	180	200
	No Load rpm	1000	833	600	500	400	333	300	240	200	167	150	120	100	83	75	60	50	40	33	30	25	20	17	15
S9KD□ B S9KD□ B-S	N-m	1.31	1.57	2.18	2.62	3.27	3.93	4.37	4.91	5.89	7.07	7.86	8.84	10.61	12.73	14.15	17.68	21.22	23.87	28.64	29.40	29.40	29.40	29.40	29.40
	oz-in	85.5	222.6	309.1	370.9	463.7	556.4	618.2	695.5	834.6	1001.5	1112.8	1251.9	1502.3	1802.7	2003.0	2503.8	3004.5	3380.1	4056.1	4163.0	4163.0	4163.0	4163.0	4163.0
	kgf · cm	13.4	16.0	22.3	26.7	33.4	40.1	44.6	50.1	60.1	72.2	80.2	90.2	108.3	129.9	144.3	180.4	216.5	243.6	292.3	300.0	300.0	300.0	300.0	300.0

■ The code in ■ of gearhead model is for gear ratio
■ It is the permissible torque of the assembled motor and gearhead
The permissible torque of the combination of the regular gearhead and the inter-decimal gearhead is 30kgf · ㎝.
■ ■ color indicates that the output shaft of the geared motor rotates in the same direction as the output shaft of the motor.
Others indicate rotation in the opposite direction.
■ No Load rpm equals Motor no load rpm divided by gear ratio. The actual rotation speed is less 2-20% than the displayed value according to the load
■ There is no marked the 'L' code for it is an exclusive use.

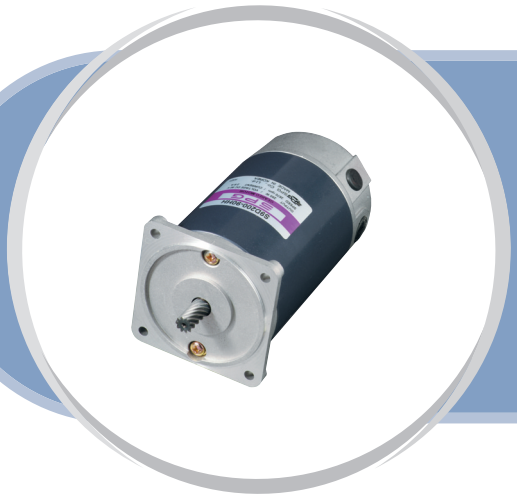

STANDARD TYPE

S9D SERIES [200W]

MOTOR DIMENSION

UNIT : mm[inch]

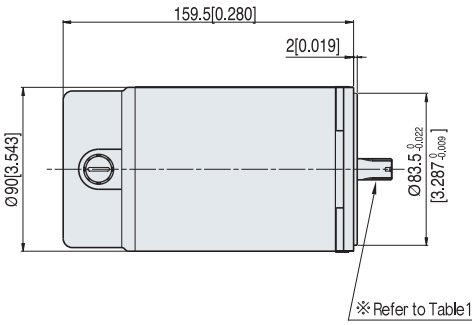

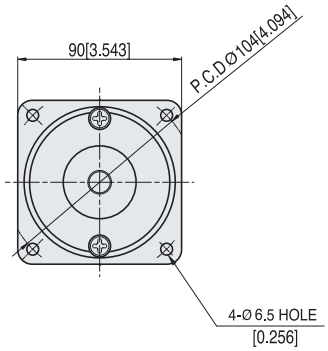

CHARACTERISTIC CURVE

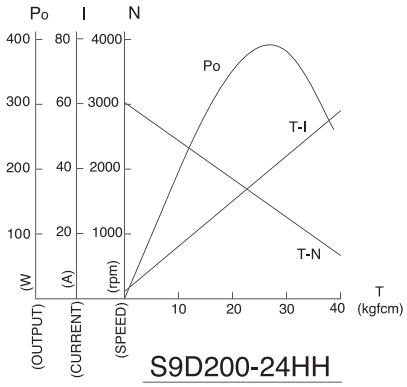

▼ SPEC for output shaft of motor-(Table 1)

MODEL	GEARED TYPE	STRAIGHT TYPE	D-CUT TYPE	KEY TYPE
	S9D300-□HH	S9D300-□S	S9D300-□D	S9D300-□K
TYPE OF OUTPUT SHAFT	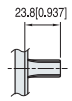	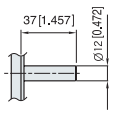	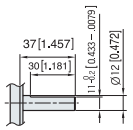	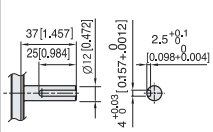

CIRCUIT DIAGRAM

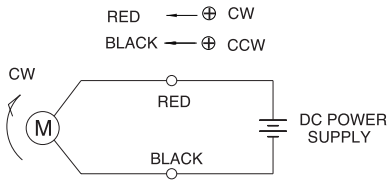

The direction of motor rotation is as viewed from the front shaft end of the motor

MOTOR SPECIFICATION

(Voltage : DC 24V)

Type	Voltage	Output	No Load		At Rated Lod				Run Duty	Weight
			Speed	Current(MAX.)	Speed	Torque		Current		
	V	W	RPM	A	RPM			A	Hr	Kg
S9D200-12□	12	200	3050	3.2	2260	0.843	N-m	27.0	2000	4.5
						119.3	oz-in			
						8.60	kgf · cm			
S9D200-24□	24	200	3050	2.0	2600	0.735	N-m	12.0	2000	4.5
						104.1	oz-in			
						7.50	kgf · cm			
S9D200-90□	90	200	3050	0.5	2670	0.715	N-m	2.8	2000	4.5
						101.3	oz-in			
						7.30	kgf · cm			

※ Run duty is valued at rated Voltage and No load

GEARED MOTOR SPECIFICATION

UNIT : mm[inch]

▼ GEARED MOTOR ※ MOTOR MODEL : S9D300-□HH
※ HEAD MODEL : S9□H3B~S9□H200B

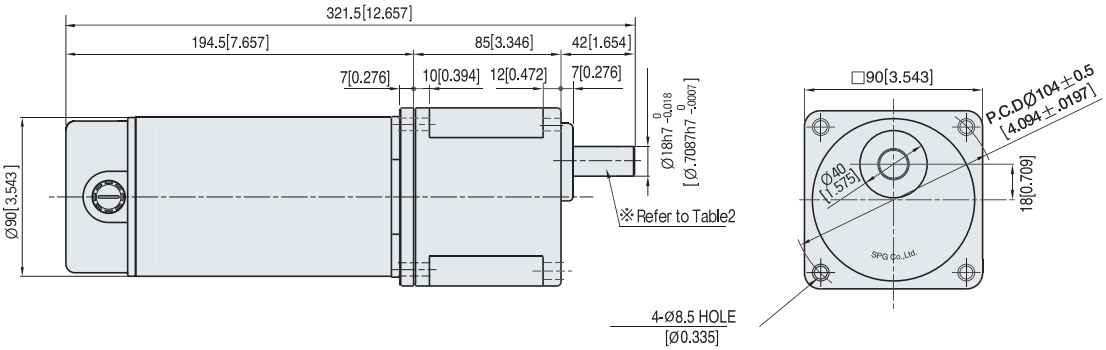

▼ ※30(40) - (Table1)

PART		WEIGHT:kg(oz)
MOTOR		5.0(176.4)
GEAR HEAD	S9 □ H3B ~S9 □ H10B	1.65(58.2)
	S9 □ H12.5B ~S9 □ H20B	1.80(63.5)
	S9 □ H25B ~S9 □ H60B	1.90(67.0)
	S9 □ H75B ~S9 □ H200B	1.95(68.8)

▼ SPEC for output shaft of gearhead-(Table2)

MODEL	TYPES OF OUTPUT SHAFT
STRAIGHT TYPE	
S9SH3B ~S9SH200B	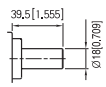
D-CUT TYPE	
S9DH3B ~S9DH200B	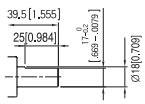
KEY TYPE	
S9KH3B ~S9KH200B	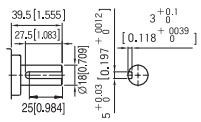

▼ KEY SPEC

GEAR HEAD	MOTOR
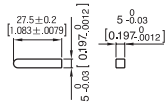	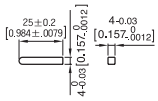

GEAR HEAD RATED LOAD

S9D200-90HH

MODEL	GEAR RATIO	3	3.6	5	6	7.5	9	10	12.5	15	18	20	25	30	36	40	50	60	75	90	100	120	150	180	200
	No Load rpm	1017	847	610	508	407	339	305	244	203	169	153	122	102	85	76	61	51	41	34	31	25	20	17	15
S9KH□ B	N-m	1.74	2.09	2.90	3.48	4.35	5.22	5.79	6.52	7.82	9.39	10.43	10.56	14.08	16.90	18.77	23.47	28.16	29.40	29.40	29.40	29.40	29.40	29.40	29.40
	oz-in	246.2	295.4	410.3	492.3	615.4	738.5	820.5	923.1	1107.7	1329.3	1477.0	1495.4	1993.9	2392.7	2658.5	3323.2	3987.8	4163.0	4163.0	4163.0	4163.0	4163.0	4163.0	4163.0
	kgf · cm	17.7	21.3	29.6	35.5	44.3	53.2	59.1	66.5	79.8	95.8	106.4	107.8	143.7	172.4	191.6	239.5	287.4	300.0	300.0	300.0	300.0	300.0	300.0	300.0

■ The code in ■ of gearhead model is for gear ratio
■ It is the permissible torque of the assembled motor and gearhead
The permissible torque of the combination of the regular gearhead and the inter-decimal gearhead is 30kgf · cm.
■ ■ color indicates that the output shaft of the geared motor rotates in the same direction as the output shaft of the motor.
Others indicate rotation in the opposite direction.
■ No Load rpm equals Motor no load rpm divided by gear ratio. The actual rotation speed is less 2-20% than the displayed value according to the load
■ There is no marked the 'L' code for it is an exclusive use.

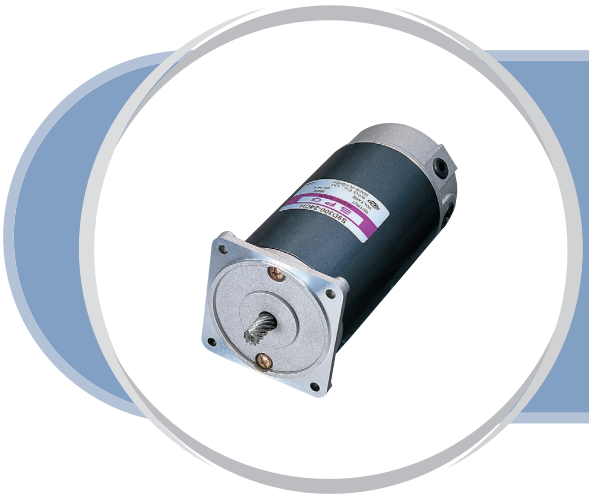

STANDARD TYPE

S9D SERIES [300W]

MOTOR DIMENSION

UNIT : mm[inch]

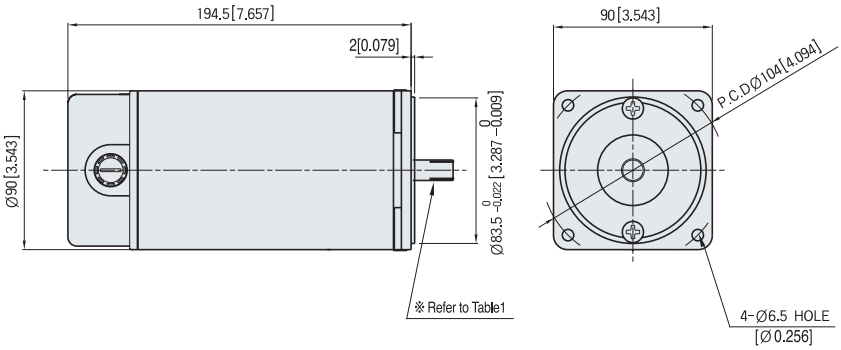

CHARACTERISTIC CURVE

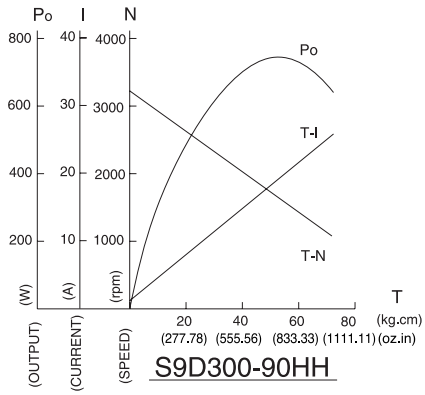

▼ SPEC for output shaft of motor-(Table1)

MODEL	GEARED TYPE	STRAIGHT TYPE	D-CUT TYPE	KEY TYPE
	S9D300-□HH	S9D300-□S	S9D300-□D	S9D300-□K
TYPE OF OUTPUT SHAFT	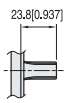	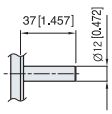	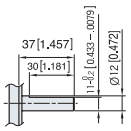	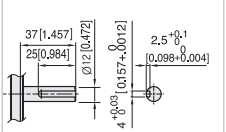

CIRCUIT DIAGRAM

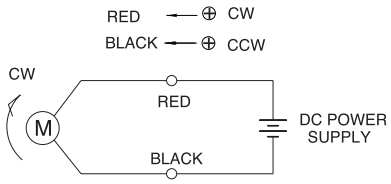

The direction of motor rotation is as viewed from the front shaft end of the motor

MOTOR SPECIFICATION

(Voltage : DC 24V)

Type	Voltage	Output	No Load		At Rated Lod				Run Duty	Weight
			Speed	Current(MAX.)	Speed	Torque		Current		
	V	W	RPM	A	RPM			A	Hr	Kg
S9D300-24□	24	300	3000	1.4	2520	1.137	N-m	13.9	2000	4.7
						161.0	oz-in			
						11.60	kgf · cm			
S9D300-90□	90	300	3000	0.5	2700	1.058	N-m	4.2	2000	4.7
						149.9	oz-in			
						10.80	kgf · cm			

※ Run duty is valued at rated Voltage and No load

GEARED MOTOR SPECIFICATION

UNIT : mm[inch]

▼ GEARED MOTOR ※ MOTOR MODEL : S9D300-□HH
※ HEAD MODEL : S9□H3B~S9□H200B

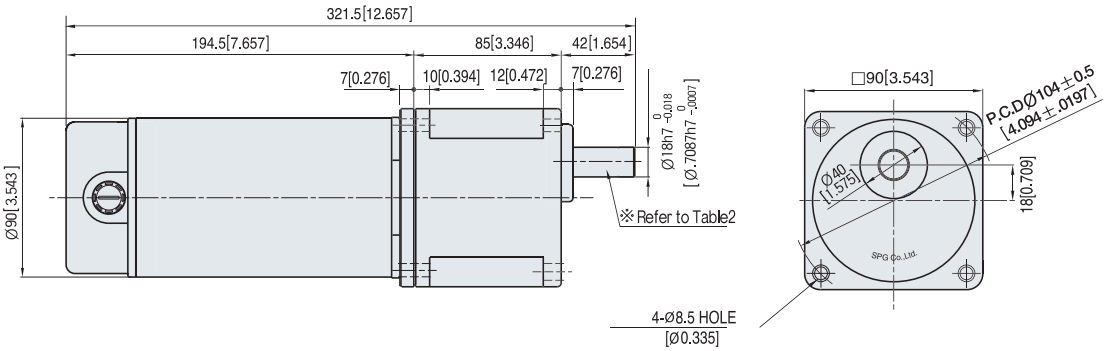

▼ ※30(40) - (Table1)

PART		WEIGHT:kg(oz)
MOTOR		5.0(176.4)
GEAR HEAD	S9 □ H3B ~S9 □ H10B	1.65(58.2)
	S9 □ H12.5B ~S9 □ H20B	1.80(63.5)
	S9 □ H25B ~S9 □ H60B	1.90(67.0)
	S9 □ H75B ~S9 □ H200B	1.95(68.8)

▼ SPEC for output shaft of gearhead-(Table2)

MODEL	TYPES OF OUTPUT SHAFT
STRAIGHT TYPE	
S9SH3B ~S9SH200B	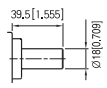
D-CUT TYPE	
S9DH3B ~S9DH200B	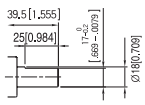
KEY TYPE	
S9KH3B ~S9KH200B	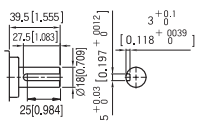

▼ KEY SPEC

GEAR HEAD	MOTOR
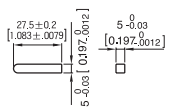	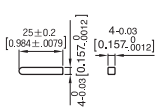

GEAR HEAD RATED LOAD

S9D300-90HH

MODEL	GEAR RATIO	3	3.6	5	6	7.5	9	10	12.5	15	18	20	25	30	36	40	50	60	75	90	100	120	150	180	200
	No Load rpm	1000	833	600	500	400	333	300	240	200	167	150	120	100	83	75	60	50	40	33	30	25	20	17	15
S9KH□ B	N-m	2.57	3.08	4.28	5.14	6.42	7.71	8.57	9.64	11.56	13.88	15.42	17.34	20.81	24.98	27.75	29.40	29.40	29.40	29.40	29.40	29.40	29.40	29.40	29.40
	oz-in	363.8	436.6	606.4	727.7	909.6	1091.5	1212.8	1364.4	1637.3	1964.8	2183.1	2456.0	2947.1	3536.6	3929.5	4163.0	4163.0	4163.0	4163.0	4163.0	4163.0	4163.0	4163.0	4163.0
	kgf · cm	26.2	31.5	43.7	52.4	65.5	78.7	87.4	98.3	118.0	141.6	157.3	177.0	212.4	254.9	283.2	300.0	300.0	300.0	300.0	300.0	300.0	300.0	300.0	300.0

■ The code in ■ of gearhead model is for gear ratio
■ It is the permissible torque of the assembled motor and gearhead
The permissible torque of the combination of the regular gearhead and the inter-decimal gearhead is 30kgf · ㎝.
■ ■ color indicates that the output shaft of the geared motor rotates in the same direction as the output shaft of the motor.
Others indicate rotation in the opposite direction.
■ No Load rpm equals Motor no load rpm divided by gear ratio. The actual rotation speed is less 2-20% than the displayed value according to the load
■ There is no marked the 'L' code for it is an exclusive use.

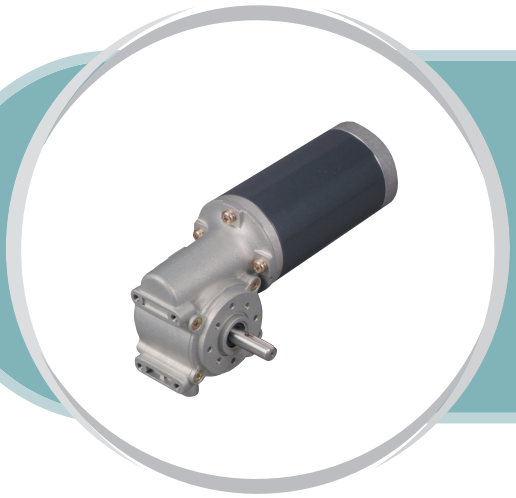

WORM GEARED TYPE

RA6 SERIES MOTOR

MOTOR DIMENSION

UNIT : mm[inch]

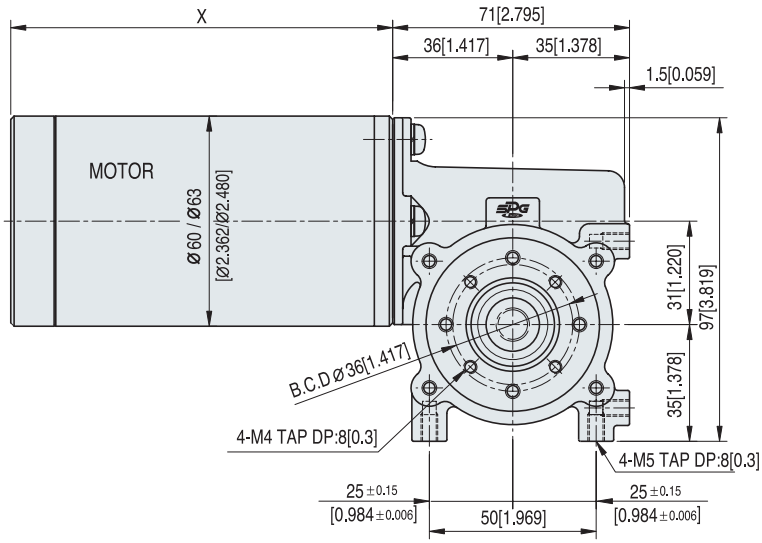

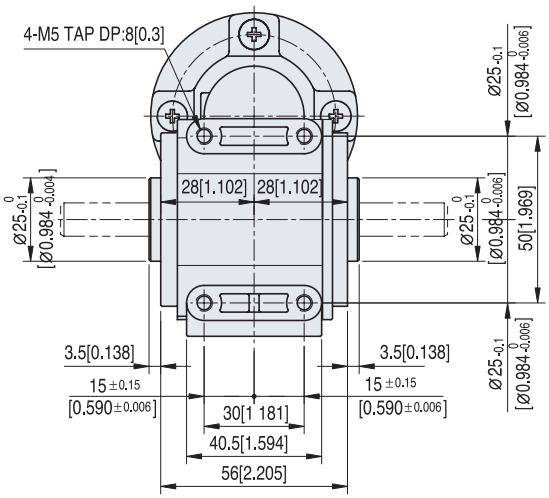

SHAFT TYPE			OUTPUT DIMENSION
STANDARD (Shaft on left)	SPECIAL (Shaft on rignt)	SPECIAL (Shaft on both)	
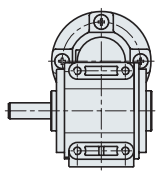	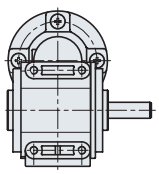	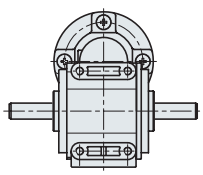	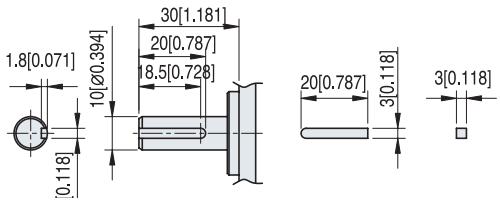

MOTOR SPECIFICATION

Gear Ratio	5	10	15	24	38	50	75
Output Speed(rpm)	740	370	247	154	97	74	49
Efficiency	0.7	0.65	0.55	0.5	0.4	0.35	0.25
Permissible Torque (kgf-cm)	40						
Weight of Gearbox (kg)	1						
Axial Load / Thrust Load (kgf)	30 / 35						

SPECIAL TYPE

MEDICAL DC MOTOR

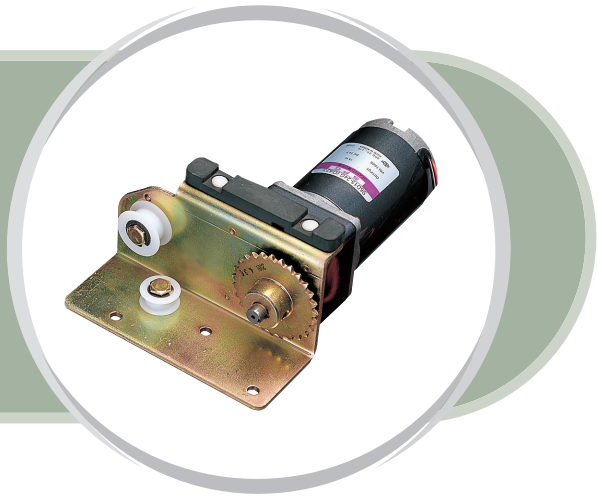

MOTOR DIMENSION

UNIT : mm[inch]

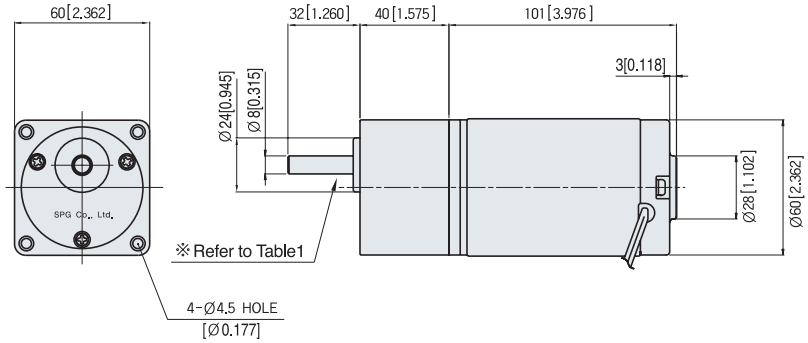

CHARACTERISTIC CURVE

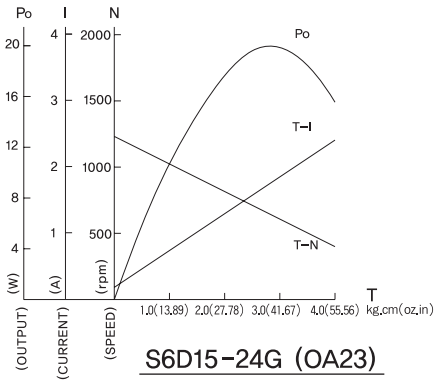

▼ SPEC for output shaft of motor-(Table1)

MODEL	STRAIGHT TYPE	D-CUT TYPE	KEY TYPE
TYPE OF OUTPUT SHAFT	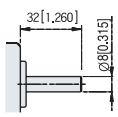	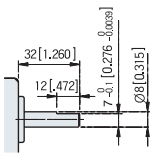	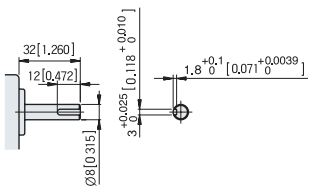

MOTOR SPECIFICATION

Type	Voltage	Output	No Load		Rated Lod			Run Duty	Weight (Only motor)
			Revolution	Current	Revolution	Torque	Current		
	V	W	RPM	A	RPM	kg · cm(oz · in)	A	Hr	Kg(oz)
S6D15-24G(OA23)	24	15	1270	MAX.0.25	915	1.6(22.22)	1.2	2000	0.9(31.75)

※ Run duty is valued at rated Voltage and No load

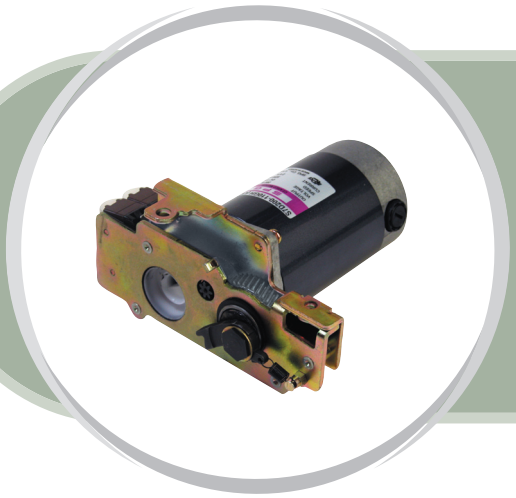

SPECIAL TYPE

HEAVY-ELECTRIC DC MOTOR

MOTOR DIMENSION

UNIT : mm[inch]

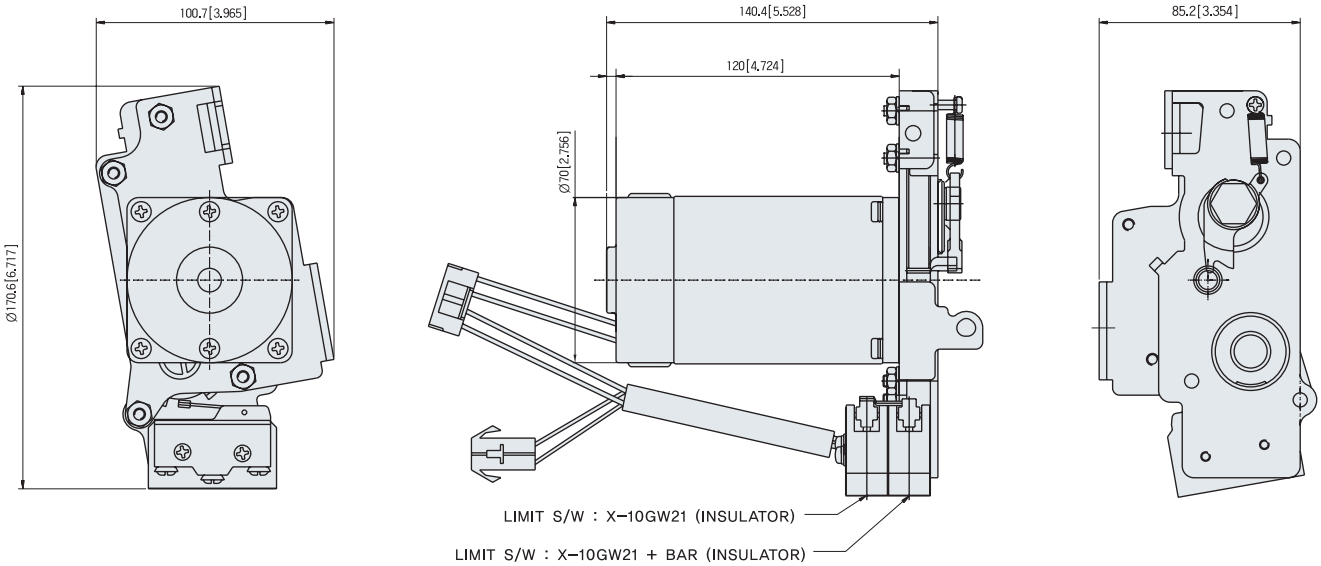

MOTOR SPECIFICATION

Type	Voltage	Output	No Load		Rated Lod			Run Duty	Weight (Only motor)
			Revolution	Current	Revolution	Torque	Current		
	V	W	RPM	A	RPM	kg · cm(oz · in)	A	Hr	Kg(oz)
S7D200-110GH(OB51)	110	220	4000	MAX.0.3	3250	6.0(83.33)	2.4	1000	2.4(84.7)
S7D225-125GH(OB52)	125	225	4500	MAX.0.3	3650	6.0(83.33)	2.4	1000	2.4(84.7)
S7D200-220GH(OB53)	220	200	4000	MAX.0.2	3250	6.0(83.33)	1.2	1000	2.4(84.7)
S7D150-24GH(OB54)	24	150	3800	MAX.1.0	2450	6.0(83.33)	11.0	1000	2.4(84.7)
S7D175-48GH(OB55)	48	175	3850	MAX.0.5	2850	6.0(83.33)	5.5	1000	2.4(84.7)

※ Run duty is valued at rated Voltage and No load

SPECIAL TYPE

AUTOMATIC DOOR DC MOTOR

MOTOR DIMENSION

UNIT : mm[inch]

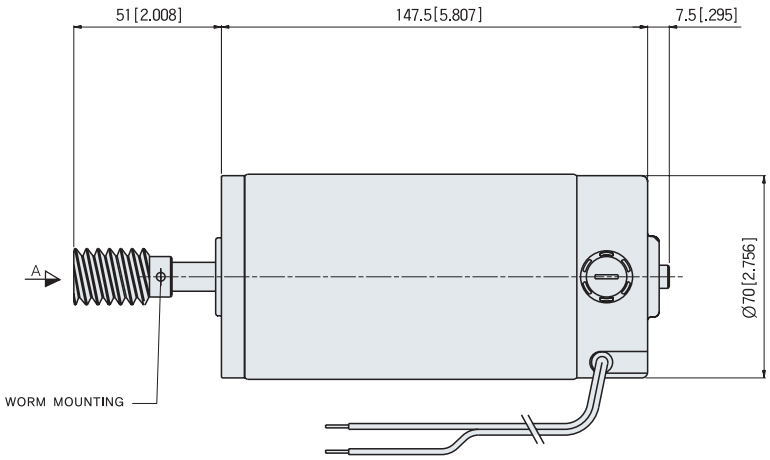

CHARACTERISTIC CURVE

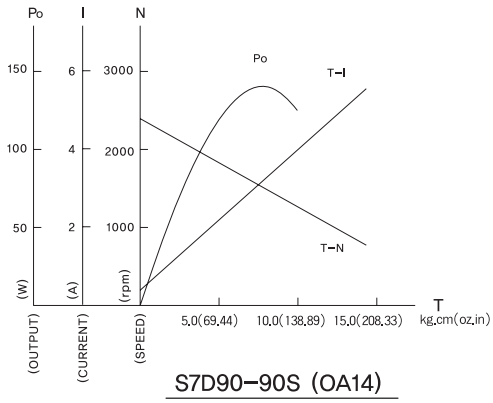

S7D90-90S (OA14)

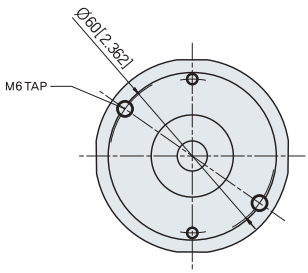

VIEW A

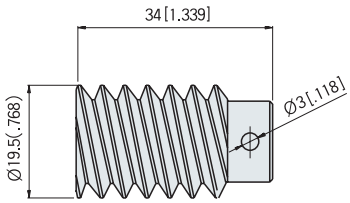

WORM DIMENSION (SCALE 2:1)

※ Refer to Table1

SPEC for worm gear (표1)

MODULE	1.25
NO. OF STARTS	3(Right)
P.C.D	17(.669)

MOTOR SPECIFICATION

Type	Voltage	Output	No Load		Rated Lod			Run Duty	Weight (Only motor)
			Revolution	Current	Revolution	Torque	Current		
	V	W	RPM	A	RPM	kg · cm(oz · in)	A	Hr	Kg(oz)
S7D90-90S(OA14)	90	90	2400	MAX.0.2	2000	4.4(61.11)	1.5	2000	1.9(67.0)

※ Run duty is valued at rated Voltage and No load

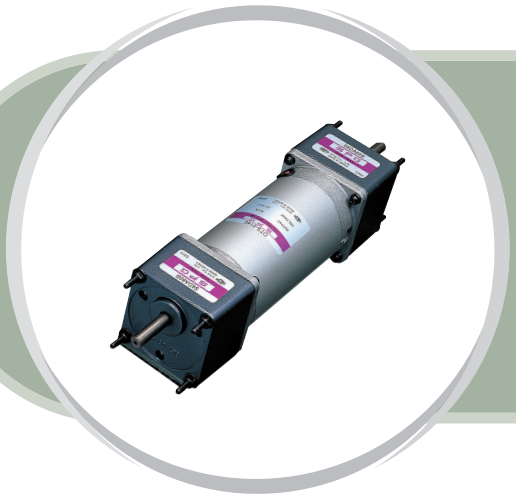

SPECIAL TYPE

DUAL GEAR-HEAD DC MOTOR

MOTOR DIMENSION

UNIT : mm[inch]

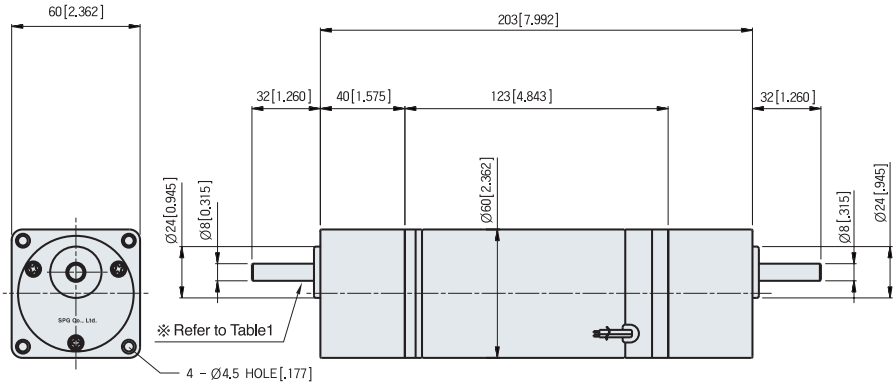

CHARACTERISTIC CURVE

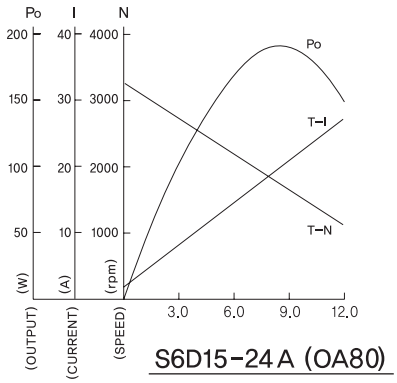

▼ SPEC for output shaft of motor-(Table1)

MODEL	STRAIGHT TYPE	D-CUT TYPE	KEY TYPE
	S6SA3□ ~S6SA250□	S6DA3□ ~S6DA250□	S6KA3□ ~S6KA250□
TYPE OF OUTPUT SHAFT	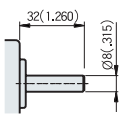	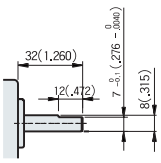	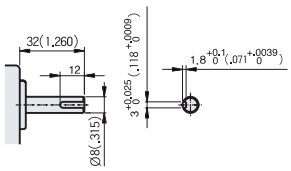

MOTOR SPECIFICATION

Type	Voltage	Output	No Load		Rated Lod			Run Duty	Weight (Only motor)
			Revolution	Current	Revolution	Torque	Current		
	V	W	RPM	A	RPM	kg · cm(oz · in)	A	Hr	Kg(oz)
S6D35-24A(OA80)	24	35	3200	MAX.1.0	2850	1.2(16.66)	2.2	2000	2.2(77.6)

※ Run duty is valued at rated Voltage and No load

SPECIAL TYPE

ELECTRIC-BRAKE ASSEMBLY DC MOTOR

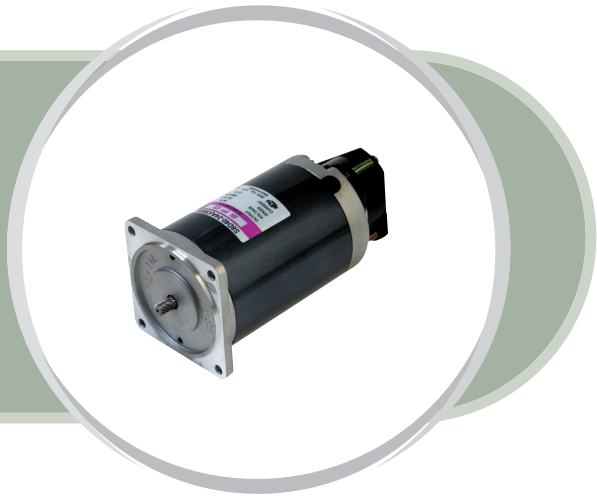

MOTOR DIMENSION

UNIT : mm[inch]

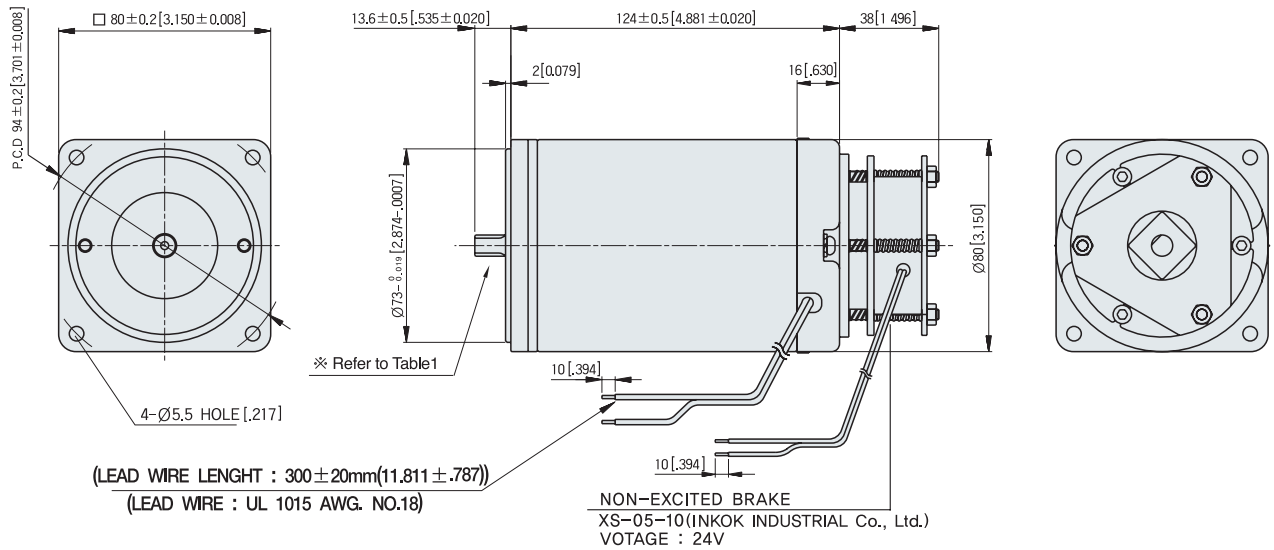

▼ SPEC for output shaft of motor-(Table1)

MODEL	GEAR TYPE	STRAIGHT TYPE	D-CUT TYPE	KEY TYPE
TYPE OF OUTPUT SHAFT	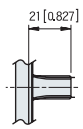	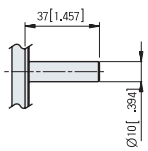	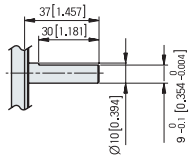	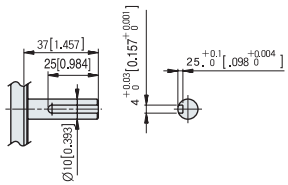

MOTOR SPECIFICATION

Type	Voltage	Output	No Load		Rated Lod			Run Duty	Weight (Only motor)
			Revolution	Current	Revolution	Torque	Current		
	V	W	RPM	A	RPM	kg · cm(oz · in)	A	Hr	Kg(oz)
S8D40-24A(OB85)	24	40	3100	MAX.0.8	3000	1.3(18.05)	2.1	2000	2.2(77.6)

※ Run duty is valued at rated Voltage and No load

SPECIAL TYPE

BS2□SERIES
DC GEARED MOTOR

MOTOR DIMENSION

UNIT : mm[inch]

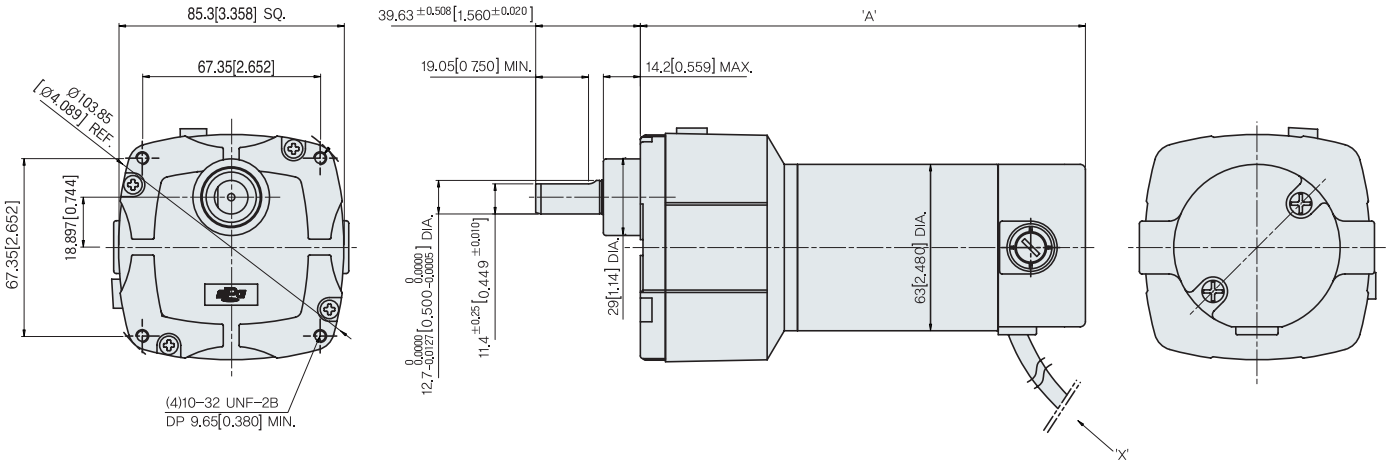

CIRCUIT DIAGRAM

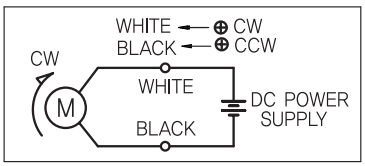

(THE DIRECTION OF MOTOR ROTATION IS AS VIEWED FROM THE OUTPUT SHAFT END OF THE MOTOR)

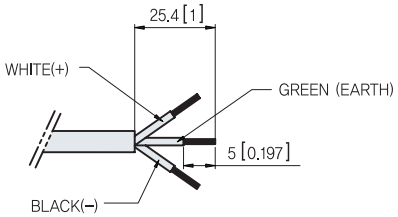

VIEW "X"

STANDARD FEATURES

- Vented gearhousing for extended seal life.
- Industrial lip type seals on motors and output shaft.
- Needle bearing on output shaft for increased radial load capacity and long life.
- Permanently lubricated gearing utilizing oil for long life.
- Helical pinion accurately cut on motor shaft for maximum strength and minimum noise.

MOTOR SPECIFICATION

Type	Voltage	Output	No Load		Rated Lod			Dimension	Run Duty	Weight
			Speed	Current	Speed	Torque	Current	A		
	V	W	RPM	A	RPM	kg-cm(lb-in)	A	mm/inch	Hr	kg(lb)
BS23DA□	24	26	2800	0.3 max	2450	1.03(0.89)	1.8	152.5/6.00	2000	1.9(4.19)
BS23DB□	130	26	2800	0.3 max	2500	1.01(0.88)	0.4	152.5/6.00	2000	1.9(4.19)
BS24DA□	24	44	2800	0.3 max	2400	1.80(1.56)	2.6	168.5/6.63	2000	2.1(4.63)
BS24DB□	130	44	2800	0.3 max	2450	1.75(1.52)	0.5	168.5/6.63	2000	2.1(4.63)

※ Run duty is valued at rated Voltage and No load

Geared motor rated torque

TYPE	GEAR RATIO	6	12	18	30	60	90	180	300	450
BS23DA□	rpm	408.3	204.2	136.1	81.7	40.8	27.2	13.6	8.2	5.4
	kg-cm	5.30	10.60	15.90	26.49	46.09	46.09	46.09	46.09	46.09
	N-m(lb-in)	0.52(4.60)	1.04(9.20)	1.56(13.80)	2.60(23.00)	4.52(40.00)	4.52(40.00)	4.52(40.00)	4.52(40.00)	4.52(40.00)
BS23DB□	rpm	416.7	208.3	138.9	83.3	41.7	27.8	13.9	8.3	5.6
	kg-cm	5.20	10.39	15.59	25.98	46.09	46.09	46.09	46.09	46.09
	N-m(lb-in)	0.51(4.51)	1.02(9.02)	1.53(13.53)	2.55(22.55)	4.52(40.00)	4.52(40.00)	4.52(40.00)	4.52(40.00)	4.52(40.00)
BS24DA□	rpm	400.0	200.0	133.3	80.0	40.0	26.7	13.3	8.0	5.3
	kg-cm	9.26	18.52	27.78	46.09	46.09	46.09	46.09	46.09	46.09
	N-m(lb-in)	0.91(8.04)	1.81(16.08)	2.72(24.11)	4.52(40.00)	4.52(40.00)	4.52(40.00)	4.52(40.00)	4.52(40.00)	4.52(40.00)
BS24DB□	rpm	408.3	204.2	136.1	81.7	40.8	27.2	13.6	8.2	5.4
	kg-cm	9.00	18.00	27.01	45.01	46.09	46.09	46.09	46.09	46.09
	N-m(lb-in)	0.88(7.81)	1.76(15.63)	2.65(23.44)	4.41(39.07)	4.52(40.00)	4.52(40.00)	4.52(40.00)	4.52(40.00)	4.52(40.00)

■ The peak torque of the gear head is 46.09 kg-cm(40.00 lb-in)
■ The ▒ mark indicates the ratio.
■ ▒ color indicates that the output shaft of the geared motor rotates in the opposite direction as the output shaft of the motor.
Others indicates the rotation in the same direction.

CAUTION FOR USING

Before using, make sure to use it after reading the Instruction Manual closely.
For the suggestions on using, they are classified as caution and warning

CAUTION

- Use only according to the specifiation of speed controller. If not, there will be dangerous fire, electric shock, iniury and damage of the unit.
- Do not put the fingers or things into the outlet of the unit. There may be the electric shock, injury or danger of fire.
- Do not operate with the wet hands. The electric shock may occur.
- In case of moving, do not catch the output shaft, connecting part or the lead wire. There may be the injury by the drop.
- Make sure to check whether the things are what you ordered. If you install the other thing, there may occur the injury and the fire.
- The motor should be used after it is fixed tightly. If not, there may occur the injury and the damage of the unit.
- Make sure to install the cover not to touch the rotatory part. If not, there will be injury.
- Make sure to check the rotatory direction before connecting the machine. If not, there may occur the injury and the damage of the unit.
- Do not touch the side of the motor output shaft (key way, cutting part) with the naked hands. If not, there may occur the injury.
- Make sure to install the overload device, for the protection device is not attached to the motor. It is desirable to install the promotion device leakage shorter electricity execpt the overload protection device. If not, the fire may occur.
- In case of putting out power plug, do not draw with grasping the plug for the electric shock and fire may occur.
- The motor and the controlling unit should be used only by the designated compounding. If not, the fire may occur.
- Before connecting with the machine and beginning to operate, make sure to install the parameter for the machine. If not, the damage may take place.
- In case of connecting with the machine and beginning to operate, do in the state of emergency stop anytime. If not, the damage will occur.
- If there are abnormal cases, turn off the power at once. If not, there will be the electric shock, injury and the damage.
- In operating, do not touch the rotor(output shaft). If not, the damage will take place because of winding.
- In operating and right after the operation, do not touch the controlling device by your hands or body. The fire will occur.

WARNING

- Never put around the explosive atmosphere, gas to be burnt, corrosive air, the location to be wet and combustibles. If not, there may occur the electric shock and the fire.
- In case of movement, connection and checking of motor, please turn off the electric power.
- Make sure to connect motor and speed controller based on the specification. If not, there may occur the electric shock and the fire.
- The power cable and the lead line should not be bent, pulled and inserted by force. If not, the electric shock and the fire may occur.
- In case the motor and controlling unit are attached to the machine, never touch by hand or connect with the earth. If not, the electric shock may take place.
- Never operate in the state of exposing the flowing current. If not, the electric shock may take place.
- In case of interruption of electric power and working the protection of overheat, please turn off the power. When motors are working continuously, there may be injury and damage of the unit.
- For the 30 seconds after the power off, do not touch the output terminal of the controlling unit. If not, the electric shock may occur because of the residual volts.

MEMO

MEMO

SPG MOTOR

www.spg.co.kr

■ SPG 67B/L 12LOT, 628-11, GOJAN-DONG, NAMDONG-KU, INCHON, KOREA
TEL : (032) 820-8200 FAX : (032) 821-0383

■ SALES DIVISION TEL : (032) 821-7090 FAX : (032) 821-0383

Revision 3 (2012.06.13)
Printed in Korea 2012.06.21